Using Avaya 3735 DECT handsets connected to Avaya Aura® Communication Manager and IP Office

Release 4.6
July 2017

© 2017, Avaya Inc.
All Rights Reserved.

Note

Using a cell, mobile, or GSM phone, or a two-way radio in close proximity to an Avaya IP telephone might cause interference.

Documentation disclaimer

“Documentation” means information published in varying mediums which may include product information, operating instructions and performance specifications that are generally made available to users of products. Documentation does not include marketing materials. Avaya shall not be responsible for any modifications, additions, or deletions to the original published version of Documentation unless such modifications, additions, or deletions were performed by or on the express behalf of Avaya. End User agrees to indemnify and hold harmless Avaya, Avaya's agents, servants and employees against all claims, lawsuits, demands and judgments arising out of, or in connection with, subsequent modifications, additions or deletions to this documentation, to the extent made by End User.

Link disclaimer

Avaya is not responsible for the contents or reliability of any linked websites referenced within this site or Documentation provided by Avaya. Avaya is not responsible for the accuracy of any information, statement or content provided on these sites and does not necessarily endorse the products, services, or information described or offered within them. Avaya does not guarantee that these links will work all the time and has no control over the availability of the linked pages.

Warranty

Avaya provides a limited warranty on Avaya hardware and software. Refer to your sales agreement to establish the terms of the limited warranty. In addition, Avaya’s standard warranty language, as well as information regarding support for this product while under warranty is available to Avaya customers and other parties through the Avaya Support website: https://support.avaya.com/helpcenter/getGenericDetails?detailId=C20091120112456651010 under the link “Warranty & Product Lifecycle” or such successor site as designated by Avaya. Please note that if You acquired the product(s) from an authorized Avaya Channel Partner outside of the United States and Canada, the warranty is provided to You by said Avaya Channel Partner and not by Avaya.

“Hosted Service” means an Avaya hosted service subscription that You acquire from either Avaya or an authorized Avaya Channel Partner (as applicable) and which is described further in Hosted SAS or other service description documentation regarding the applicable hosted service. If You purchase a Hosted Service subscription, the foregoing limited warranty may not apply but You may be entitled to support services in connection with the Hosted Service as described further in your service description documents for the applicable Hosted Service. Contact Avaya or Avaya Channel Partner (as applicable) for more information.

Hosted Service

THE FOLLOWING APPLIES ONLY IF YOU PURCHASE AN AVAYA HOSTED SERVICE SUBSCRIPTION FROM AVAYA OR AN AVAYA CHANNEL PARTNER (AS APPLICABLE), THE TERMS OF USE FOR HOSTED SERVICES ARE AVAILABLE ON THE AVAYA WEBSITE, HTTPS://SUPPORT.AVAYA.COM/LICENSEINFO UNDER THE LINK “Avaya Terms of Use for Hosted Services” OR SUCH SUCCESSOR SITE AS DESIGNATED BY AVAYA, AND ARE APPLICABLE TO ANYONE WHO ACCESSES OR USES THE HOSTED SERVICE. BY ACCESSING OR USING THE HOSTED SERVICE, OR AUTHORIZING OTHERS TO DO SO, YOU, ON BEHALF OF YOURSELF AND THE ENTITY FOR WHOM YOU ARE DOING SO (HEREINAFTER REFERRED TO INTERCHANGEABLY AS “YOU” AND “END USER”), AGREE TO THE TERMS OF USE. IF YOU ARE ACCEPTING THE TERMS OF USE ON BEHALF A COMPANY OR OTHER LEGAL ENTITY, YOU REPRESENT THAT YOU HAVE THE AUTHORITY TO BIND SUCH ENTITY TO THESE TERMS OF USE. IF YOU DO NOT HAVE SUCH AUTHORITY, OR IF YOU DO NOT WISH TO ACCEPT THESE TERMS OF USE, YOU MUST NOT ACCESS OR USE THE HOSTED SERVICE OR AUTHORIZE ANYONE TO ACCESS OR USE THE HOSTED SERVICE.

Licenses

THE SOFTWARE LICENSE TERMS AVAILABLE ON THE AVAYA WEBSITE, HTTPS://SUPPORT.AVAYA.COM/LICENSEINFO, UNDER THE LINK “AVAYA SOFTWARE LICENSE TERMS (Avaya Products)” OR SUCH SUCCESSOR SITE AS DESIGNATED BY AVAYA, ARE APPLICABLE TO ANYONE WHO DOWNLOADS, USES AND/OR INSTALLS AVAYA SOFTWARE, PURCHASED FROM AVAYA INC., ANY AVAYA AFFILIATE, OR AN AVAYA CHANNEL PARTNER (AS APPLICABLE) UNDER A COMMERCIAL AGREEMENT WITH AVAYA OR AN AVAYA CHANNEL PARTNER. UNLESS OTHERWISE AGREED TO BY AVAYA IN WRITING, AVAYA DOES NOT EXTEND THIS LICENSE IF THE SOFTWARE WAS OBTAINED FROM ANYONE OTHER THAN AVAYA, AN AVAYA AFFILIATE OR AN AVAYA CHANNEL PARTNER; AVAYA RESERVES THE RIGHT TO TAKE LEGAL ACTION AGAINST YOU AND ANYONE ELSE USING OR SELLING THE SOFTWARE WITHOUT A LICENSE. BY INSTALLING, DOWNLOADING OR USING THE SOFTWARE, OR AUTHORIZING OTHERS TO DO SO, YOU, ON BEHALF OF YOURSELF AND THE ENTITY FOR WHOM YOU ARE INSTALLING, DOWNLOADING OR USING THE SOFTWARE (HEREINAFTER REFERRED TO INTERCHANGEABLY AS “YOU” AND “END USER”), AGREE TO THESE TERMS AND CONDITIONS AND CREATE A BINDING CONTRACT BETWEEN YOU AND AVAYA INC. OR THE APPLICABLE AVAYA AFFILIATE (“AVAYA”).

Avaya grants You a license within the scope of the license types described below, with the exception of Heritage Nortel Software, for which the scope of the license is detailed below. Where the order documentation does not expressly identify a license type, the applicable license will be a Designated System License. The applicable number of licenses and units of capacity for which the license is granted will be one (1), unless a different number of licenses or units of capacity is specified in the documentation or other materials available to You. “Software” means computer programs in object code, provided by Avaya or an Avaya Channel Partner, whether as stand-alone products, pre-installed on hardware products, and any upgrades, updates, patches, bug fixes, or modified versions thereto. “Designated Processor” means a single stand-alone computing device. “Server” means a Designated Processor that hosts a software application to be accessed by multiple users. “Instance” means a single copy of the Software executing at a particular time: (i) on one physical machine; or (ii) on one deployed software virtual machine (“VM”) or similar deployment.

License types

Designated System(s) License (DS). End User may install and use each copy or an Instance of the Software only on a number of Designated Processors up to the number indicated in the order. Avaya may require the Designated Processor(s) to be identified in the order by type, serial number, feature key, Instance, location or other specific designation, or to be provided by End User to Avaya through electronic means established by Avaya specifically for this purpose.

Shrinkwrap License (SR). You may install and use the Software in accordance with the terms and conditions of the applicable license agreements, such as “shrinkwrap” or “clickthrough” license accompanying or applicable to the Software (“Shrinkwrap License”).

Heritage Nortel Software

“Heritage Nortel Software” means the software that was acquired by Avaya as part of its purchase of the Nortel Enterprise Solutions Business in December 2009. The Heritage Nortel Software is the software contained within the list of Heritage Nortel Products located at https://support.avaya.com/LicenseInfo under the link “Heritage Nortel Products” or such successor site as designated by Avaya. For Heritage Nortel Software, Avaya grants Customer a license to use Heritage Nortel Software provided hereunder solely to the extent of the authorized activation or authorized usage level, solely for the purpose specified in the Documentation, and solely as embedded in, for execution on, or for communication with Avaya equipment. Charges for Heritage Nortel Software may be based on extent of activation or use authorized as specified in an order or invoice.

Copyright

Except where expressly stated otherwise, no use should be made of materials on this site, the Documentation, Software, Hosted Service, or hardware provided by Avaya. All content on this site, the

documentation, Hosted Service, and the product provided by Avaya including the selection, arrangement and design of the content is owned either by Avaya or its licensors and is protected by copyright and other intellectual property laws including the sui generis rights relating to the protection of databases. You may not modify, copy, reproduce, republish, upload, post, transmit or distribute in any way any content, in whole or in part, including any code and software unless expressly authorized by Avaya. Unauthorized reproduction, transmission, dissemination, storage, and or use without the express written consent of Avaya can be a criminal, as well as a civil offense under the applicable law.

Virtualization

The following applies if the product is deployed on a virtual machine. Each product has its own ordering code and license types. Note that each Instance of a product must be separately licensed and ordered. For example, if the end user customer or Avaya Channel Partner would like to install two Instances of the same type of products, then two products of that type must be ordered.

Third Party Components

"Third Party Components" mean certain software programs or portions thereof included in the Software or Hosted Service may contain software (including open source software) distributed under third party agreements ("Third Party Components"), which contain terms regarding the rights to use certain portions of the Software ("Third Party Terms"). As required, information regarding distributed Linux OS source code (for those products that have distributed Linux OS source code) and identifying the copyright holders of the Third Party Components and the Third Party Terms that apply is available in the products, Documentation or on Avaya's website at: https://support.avaya.com/Copyright or such successor site as designated by Avaya. The open source software license terms provided as Third Party Terms are consistent with the license rights granted in these Software License Terms, and may contain additional rights benefiting You, such as modification and distribution of the open source software. The Third Party Terms shall take precedence over these Software License Terms, solely with respect to the applicable Third Party Components to the extent that these Software License Terms impose greater restrictions on You than the applicable Third Party Terms.

The following applies only if the H.264 (AVC) codec is distributed with the product. THIS PRODUCT IS LICENSED UNDER THE AVC PATENT PORTFOLIO LICENSE FOR THE PERSONAL USE OF A CONSUMER OR OTHER USES IN WHICH IT DOES NOT RECEIVE REMUNERATION TO (i) ENCODE VIDEO IN COMPLIANCE WITH THE AVC STANDARD ("AVC VIDEO") AND/OR (ii) DECODE AVC VIDEO THAT WAS ENCODED BY A CONSUMER ENGAGED IN A PERSONAL ACTIVITY AND/OR WAS OBTAINED FROM A VIDEO PROVIDER LICENSED TO PROVIDE AVC VIDEO. NO LICENSE IS GRANTED OR SHALL BE IMPLIED FOR ANY OTHER USE. ADDITIONAL INFORMATION MAY BE OBTAINED FROM MPEG LA, L.L.C. SEE HTTP://WWW.MPEGLA.COM.

Service Provider

THE FOLLOWING APPLIES TO AVAYA CHANNEL PARTNER'S HOSTING OF AVAYA PRODUCTS OR SERVICES. THE PRODUCT OR HOSTED SERVICE MAY USE THIRD PARTY COMPONENTS SUBJECT TO THIRD PARTY TERMS AND REQUIRE A SERVICE PROVIDER TO BE INDEPENDENTLY LICENSED DIRECTLY FROM THE THIRD PARTY SUPPLIER. AN AVAYA CHANNEL PARTNER'S HOSTING OF AVAYA PRODUCTS MUST BE AUTHORIZED IN WRITING BY AVAYA AND IF THOSE HOSTED PRODUCTS USE OR EMBED CERTAIN THIRD PARTY SOFTWARE, INCLUDING BUT NOT LIMITED TO MICROSOFT SOFTWARE OR CODECS, THE AVAYA CHANNEL PARTNER IS REQUIRED TO INDEPENDENTLY OBTAIN ANY APPLICABLE LICENSE AGREEMENTS, AT THE AVAYA CHANNEL PARTNER'S EXPENSE, DIRECTLY FROM THE APPLICABLE THIRD PARTY SUPPLIER.

WITH RESPECT TO CODECS, IF THE AVAYA CHANNEL PARTNER IS HOSTING ANY PRODUCTS THAT USE OR EMBED THE G.729 CODEC, H.264 CODEC, OR H.265 CODEC, THE AVAYA CHANNEL PARTNER ACKNOWLEDGES AND AGREES THE AVAYA CHANNEL PARTNER IS RESPONSIBLE FOR ANY AND ALL RELATED FEES AND/OR ROYALTIES. THE G.729 CODEC IS LICENSED BY SIPRO LAB TELECOM INC. SEE WWW.SIPRO.COM/CONTACT.HTML. THE H.264 (AVC) CODEC IS LICENSED UNDER THE AVC PATENT PORTFOLIO LICENSE FOR THE PERSONAL USE OF A CONSUMER OR OTHER USES IN WHICH IT DOES NOT RECEIVE REMUNERATION TO: (I) ENCODE VIDEO IN COMPLIANCE WITH THE AVC STANDARD ("AVC VIDEO") AND/OR (II) DECODE AVC VIDEO THAT WAS ENCODED BY A CONSUMER ENGAGED IN A PERSONAL ACTIVITY AND/OR WAS OBTAINED FROM A VIDEO PROVIDER LICENSED TO PROVIDE AVC VIDEO. NO LICENSE IS GRANTED OR SHALL BE IMPLIED FOR ANY OTHER USE. ADDITIONAL INFORMATION FOR H.264 (AVC) AND H.265 (HEVC) CODECS MAY BE OBTAINED FROM MPEG LA, L.L.C. SEE HTTP://WWW.MPEGLA.COM.

Compliance with Laws

You acknowledge and agree that it is Your responsibility for complying with any applicable laws and regulations, including, but not limited to laws and regulations related to call recording, data privacy, intellectual property, trade secret, fraud, and music performance rights, in the country or territory where the Avaya product is used.

Preventing Toll Fraud

"Toll Fraud" is the unauthorized use of your telecommunications system by an unauthorized party (for example, a person who is not a corporate employee, agent, subcontractor, or is not working on your company's behalf). Be aware that there can be a risk of Toll Fraud associated with your system and that, if Toll Fraud occurs, it can result in substantial additional charges for your telecommunications services.

Avaya Toll Fraud intervention

If You suspect that You are being victimized by Toll Fraud and You need technical assistance or support, call Technical Service Center Toll Fraud Intervention Hotline at +1-800-643-2353 for the United States and Canada. For additional support telephone numbers, see the Avaya Support website: https://support.avaya.com or such successor site as designated by Avaya.

Security Vulnerabilities

Information about Avaya's security support policies can be found in the Security Policies and Support section of https://support.avaya.com/security.

Suspected Avaya product security vulnerabilities are handled per the Avaya Product Security Support Flow (https://support.avaya.com/css/P8/documents/100161515).

Downloading Documentation

For the most current versions of Documentation, see the Avaya Support website: https://support.avaya.com, or such successor site as designated by Avaya.

Contact Avaya Support

See the Avaya Support website: https://support.avaya.com for product or Hosted Service notices and articles, or to report a problem with your Avaya product or Hosted Service. For a list of support telephone numbers and contact addresses, go to the Avaya Support website: https://support.avaya.com (or such successor site as designated by Avaya), scroll to the bottom of the page, and select Contact Avaya Support.

Regulatory Statements

Australia Statements

Handset Magnets Statement:

Danger:

The handset receiver contains magnetic devices that can attract small metallic objects. Care should be taken to avoid personal injury.

Industry Canada (IC) Statements

RSS Standards Statement

This device complies with Industry Canada licence-exempt RSS standard(s). Operation is subject to the following two conditions:

1. This device may not cause interference, and

2. This device must accept any interference, including interference that may cause undesired operation of the device.

Le présent appareil est conforme aux CNR d'Industrie Canada applicables aux appareils radio exempts de licence. L'exploitation est autorisée aux deux conditions suivantes:

1. L'appareil ne doit pas produire de brouillage, et
2. L'utilisateur de l'appareil doit accepter tout brouillage radioélectrique subi, même si le brouillage est susceptible d'en compromettre le fonctionnement.

Radio Transmitter Statement

Under Industry Canada regulations, this radio transmitter may only operate using an antenna of a type and maximum (or lesser) gain approved for the transmitter by Industry Canada. To reduce potential radio interference to other users, the antenna type and its gain should be so chosen that the equivalent isotropically radiated power (EIRP) is not more than that necessary for successful communication.

Conformément à la réglementation d'Industrie Canada, le présent émetteur radio peut fonctionner avec une antenne d'un type et d'un gain maximal (ou inférieur) approuvé pour l'émetteur par Industrie Canada. Dans le but de réduire les risques de brouillage radioélectrique à l'intention des autres utilisateurs, il faut choisir le type d'antenne et son gain de sorte que la puissance isotrope rayonnée équivalente ne dépasse pas l'intensité nécessaire à l'établissement d'une communication satisfaisante.

This Class B digital apparatus complies with Canadian ICES-003.

Cet appareil numérique de la classe B est conforme à la norme NMB-003 du Canada.

Radiation Exposure Statement

This equipment complies with FCC & IC RSS102 radiation exposure limits set forth for an uncontrolled environment. This equipment should be installed and operated with minimum distance 20cm between the radiator & your body. This transmitter must not be co-located or operating in conjunction with any other antenna or transmitter.

Cet équipement est conforme aux limites d'exposition aux rayonnements ISEDétablies pour un environnement non contrôlé. Cet équipement doit être installé et utilisé avec un minimum de 20 cm de distance entre la source de rayonnement et votre corps.

Japan Statements

Class B Statement

This is a Class B product based on the standard of the VCCI Council. If this is used near a radio or television receiver in a domestic environment, it may cause radio interference. Install and use the equipment according to the instruction manual.

この装置は、クラスB情報技術装置です。この装置は、家庭環境で使用することを目的としていますが、この装置がラジオやテレビジョン受信機に近接して使用されると、受信障害を引き起こすことがあります。
取扱説明書に従って正しい取り扱いをして下さい。　　ＶＣＣＩ－Ｂ

Denan Power Cord Statement

Danger:

Please be careful of the following while installing the equipment:

- Please only use the connecting cables, power cord, and AC adapters shipped with the equipment or specified by Avaya to be used with the equipment. If you use any other equipment, it may cause failures, malfunctioning, or fire.
- Power cords shipped with this equipment must not be used with any other equipment. In case the above guidelines are not followed, it may lead to death or severe injury.

警告

本製品を安全にご使用頂くため、以下のことにご注意ください。

- 接続ケーブル、電源コード、AC アダプタなどの部品は、必ず製品に同梱されております添付品または指定品をご使用ください。添付品指定品以外の部品をご使用になると故障や動作不良、火災の原因となることがあります。
- 同梱されております付属の電源コードを他の機器には使用しないでください。上記注意事項を守らないと、死亡や大怪我など人身事故の原因となることがあります。

México Statement

The operation of this equipment is subject to the following two conditions:

1. It is possible that this equipment or device may not cause harmful interference, and
2. This equipment or device must accept any interference, including interference that may cause undesired operation.

La operación de este equipo está sujeta a las siguientes dos condiciones:

1. Es posible que este equipo o dispositivo no cause interferencia perjudicial y
2. Este equipo o dispositivo debe aceptar cualquier interferencia, incluyendo la que pueda causar su operación no deseada.

Power over Ethernet (PoE) Statement

This equipment must be connected to PoE networks without routing to the outside plant.

U.S. Federal Communications Commission (FCC) Statements

Compliance Statement

The changes or modifications not expressly approved by the party responsible for compliance could void the user’s authority to operate the equipment.

To comply with the FCC RF exposure compliance requirements, this device and its antenna must not be co-located or operating to conjunction with any other antenna or transmitter.

This device complies with part 15 of the FCC Rules. Operation is subject to the following two conditions:

1. This device may not cause harmful interference, and
2. This device must accept any interference received, including interferences that may cause undesired operation.

When using IEEE 802.11a wireless LAN, this product is restricted to indoor use, due to its operation in the 5.15 to 5.25GHz frequency range. The FCC requires this product to be used indoors for the frequency range of 5.15 to 5.25GHz to reduce the potential for harmful interference to co channel mobile satellite systems. High-power radar is allocated as the primary user of the 5.25 to 5.35GHz and 5.65 to 5.85GHz bands. These radar stations can cause interference with and/or damage to this device.

Class B Part 15 Statement

For product available in the USA/Canada market, only channel 1~11 can be operated. Selection of other channels is not possible.

This equipment has been tested and found to comply with the limits for a Class B digital device, pursuant to Part 15 of the FCC Rules. These limits are designated to provide reasonable protection against harmful interferences in a residential installation. This equipment generates, uses and can radiate radio frequency energy and, if not installed and used in accordance with the instructions, may cause harmful interference to radio communications. However, there is no guarantee that interference will not occur in a particular installation. If this equipment does cause harmful interferences to radio or television reception, which can be determined by turning the

equipment off and on, the user is encouraged to try to correct the interference by one or more of the following measures:

- Reorient or relocate the receiving antenna.
- Increase the separation between the equipment and receiver.
- Connect the equipment into an outlet on a circuit different from that to which the receiver is connected.
- Consult the dealer or an experienced radio/TV technician for help.

Radiation Exposure Statement

This equipment complies with FCC radiation exposure limits set forth for an uncontrolled environment . This equipment should be installed and operated with minimum distance of 8 in or 20 cm between the radiator and your body. This transmitter must not be co-located or operating in conjunction with any other antenna or transmitter.

EU Countries

This device complies with the essential requirements and other relevant provisions of Radio Equipment Directive 2014/53/EU. A copy of the Declaration may be obtained from http://support.avaya.com or Avaya Inc., 4655 Great America Parkway, Santa Clara, CA 95054–1233 USA.

General Safety Warning

- Use only the Avaya approved Limited Power Source power supplies specified for this product.
- Ensure that you:
  - Do not operate the device near water.
  - Do not use the device during a lightning storm.
  - Do not report a gas leak while in the vicinity of the leak.

Trademarks

The trademarks, logos and service marks (“Marks”) displayed in this site, the Documentation, Hosted Service(s), and product(s) provided by Avaya are the registered or unregistered Marks of Avaya, its affiliates, its licensors, its suppliers, or other third parties. Users are not permitted to use such Marks without prior written consent from Avaya or such third party which may own the Mark. Nothing contained in this site, the Documentation, Hosted Service(s) and product(s) should be construed as granting, by implication, estoppel, or otherwise, any license or right in and to the Marks without the express written permission of Avaya or the applicable third party.

Avaya is a registered trademark of Avaya Inc.

All non-Avaya trademarks are the property of their respective owners. Linux® is the registered trademark of Linus Torvalds in the U.S. and other countries.

Contents

Chapter 1: Introduction 10
Purpose 10
Change history 10
Chapter 2: Avaya 3735 DECT handset overview 11
3735 DECT handset physical layout 12
Avaya 3735 DECT handset 14
Functions 14
Accessories 17
DC3 Desktop Charger and DP1 Desktop Programmer 17
Icons and text in the display 19
Chapter 3: Menu Tree 26
Calls 26
Contacts 27
Profiles 28
Messaging 29
My favorites 30
Shortcuts 32
Connections 34
Settings 35
In call 36
Additional In Call functions 38
Customizing the menu tree 38
Chapter 4: Basic operation 39
Switching the handset on 39
Switching the handset off 39
Log in or out of a shared phone 39
Logging onto a handset 40
Logging off a handset 40
Turning the audible signal on or off 40
Locking and unlocking the keypad 41
Locking and unlocking the keypad in idle mode 41
Locking and unlocking the keypad during a call 41
Locking and Unlocking the handset 42
Muting ringtone for incoming call or message 43
Chapter 5: Configuring Bluetooth Headset 44
Introduction to **Bluetooth** 44
Wear 44
Headsets 44
Operation 45

Enabling a **Bluetooth** connection..... 45
Disabling the **Bluetooth** connection..... 45
Pairing or Connecting bluetooth headset..... 46
Selecting a **Bluetooth** headset..... 46
Removing a headset..... 47
Changing the name of **Bluetooth** headset..... 47
Changing the headset profile..... 47
Calling..... 48
Making a call..... 48
Answering a call..... 48
Ending a call..... 49
Volume and Mute Control..... 49
Adjusting the volume during a call..... 49
Turning microphone on or off during a call..... 49
Messaging..... 50
Transfer a call..... 50
Transferring a call to the handset..... 50
Transferring a call to the **Bluetooth** headset..... 50
Switching to a headset with a cord..... 51
Operation Notice..... 51
Troubleshooting..... 51
Changing the system..... 52
Subscribing handset in DECT system..... 52
Unsubscribing the system..... 53
Renaming the system..... 54
Setting priority..... 54
In charger action when in call..... 54
In charger action when not in call..... 55
Chapter 6: Menu operation..... 57
Managing incoming calls..... 57
Incoming call..... 57
Answering a call..... 57
Declining a call..... 57
Ending a call..... 58
Declining a call with a predefined message..... 58
Answering a text message with a predefined message..... 58
Managing call list..... 59
Call list..... 59
Editing a number from the call list..... 59
Saving a number from the call list..... 59
Sending a message from the call list..... 60
Deleting entries from the call list..... 60
Viewing missed calls..... 61

Viewing the time of a call..... 62
Push-to-talk group call..... 62
Managing calls in absentia..... 65
Call services..... 65
Absence handling..... 65
Deactivating the Absence settings..... 66
Diverting calls..... 66
Stopping the diversion of calls..... 67
Emergency calls..... 67
Managing Mid-call operations..... 67
During a call..... 67
Managing outgoing calls..... 74
Making a local call..... 74
Making an international call..... 75
Dialing a number with the headset button..... 75
Dialing using a pre-programmed number..... 75
Dialing a number from the call list..... 76
Dialing last called number with the headset number..... 76
Managing contacts..... 76
Contacts..... 76
Managing shortcuts..... 80
Shortcuts..... 80
Managing My favorites..... 83
Adding to **My favorites**..... 83
Editing **My favorites**..... 83
Deleting **My favorites**..... 83
Managing messages..... 84
Mini Messaging..... 84
Message List..... 84
Inbox..... 84
Sent messages..... 89
Received messages..... 89
Enhanced messaging..... 90
Mobile data..... 93
Voice mail..... 94
Managing profiles..... 95
Profiles..... 95
Alarm operation..... 96
Activating an alarm..... 96
Acoustic location signal..... 97
Testing the alarm..... 97
Alarm with location information..... 97
Alarm with data..... 97

Automatic call after alarm..... 98
Procedure call..... 98
System Profiles..... 99
Advanced Functions..... 100
Admin menu..... 100
Clearing lists in charger..... 101
Troubleshooting..... 101
Operational problems..... 101
Error or warning messages..... 102
System Handling..... 104
Software upgrade and additional features..... 104
Handset updates via the charging rack..... 104
Chapter 7: Customizing Avaya 3735 DECT handset..... 106
Settings..... 106
Sound and alert settings..... 106
Keypad lock settings..... 108
Phone lock settings..... 110
Display settings..... 111
Time and date settings..... 113
Call answering settings..... 114
Alarm settings..... 115
Other settings..... 115
Chapter 8: Maintenance..... 117
Maintenance..... 117
Maintenance of Batteries..... 117
Easy Replacement of Handset..... 118
Attach the hinge-type clip..... 120
Attach the swivel-type clip..... 120
Attach cover for no clip..... 121
Chapter 9: Energy efficiency..... 122
Chapter 10: Related Resources..... 123
Documentation..... 123
Appendix A: Safety Precautions..... 124
Safe operation..... 124
Regulatory Compliance Statements..... 124
Exposure to radio frequency signals..... 124
Regulatory Compliance Statements (USA and Canada only)..... 125
FCC and IC compliance statements..... 125
Exposure to radio frequency signals..... 126
Precautions..... 126
Handset..... 126
Battery..... 127
Glossary..... 128

Chapter 1: Introduction

Purpose

This document describes how to use product features and capabilities

This document is intended for people who want to learn how to use product features and capabilities.

Change history

Issue	Date	Summary of changes
1	July 2017	First issue for Release 4.6

Chapter 2: Avaya 3735 DECT handset overview

The Avaya 3735 DECT handset is a robust DECT handset designed for medium to high demand environments such as hospitals, elderly care, retail and enterprise. Its advanced messaging features make it ideal for applications where two-way messaging or interaction with automated equipment is required.

The Avaya 3735 DECT handset streamlines maintenance or administration and can easily be adapted to fit the changing needs of large and diversified organizations.

3735 DECT handset has the following rich features:

- Color display
- Telephony
- Messaging
- Bluetooth

The models of the handset are:

- 3735 DECT handset
- 3735 DECT handset Alarm

Related links

3735 DECT handset physical layout on page 12

3735 DECT handset physical layout

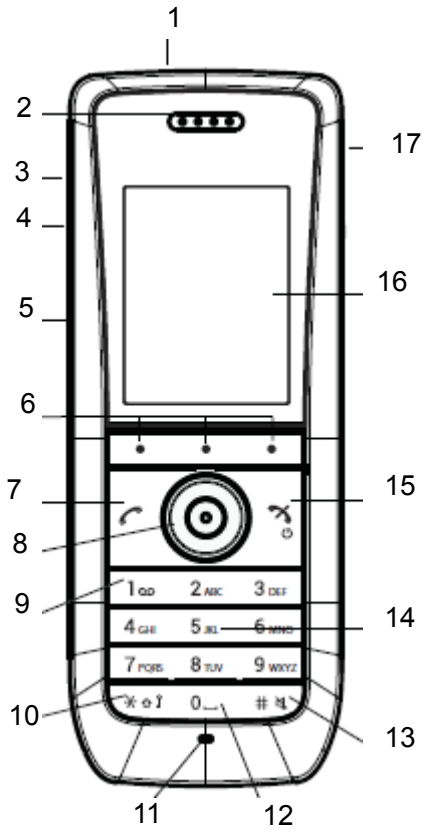

Callout number	Name	Button Icon	Description
1	Multifunction/Alarm button	N/A	Used as a shortcut to: • Functions • Long or double press modes Depending on the model of handset, the button can be used as a push button, alarm or can be configured as a **PTT** button.
2	Earpiece speaker		-
3	Volume button (up)	N/A	Increases the speaker volume.
4	Volume button (down)	N/A	Decreases the speaker volume.
5	Mute and PTT button	N/A	• Turning on or off audible signals in an idle mode.

Table continues…

Callout number	Name	Button Icon	Description
			• Muting the ring signal for an incoming call. • Turning the microphone on or off during a call.
6	Soft keys		Can be pre-programmed or used with the GUI.
7	Off hook key		Used for: • Answering a call. • Pre-dialling a number. • Creating a shortcut to the **Call list**.
8	Five-way navigation key		Used to step in the menu and carry out various functions. A navigation key with the Left, Right, Up, Down, and Confirmation (in the middle) keys. These keys, except the middle key, can also be programmed for shortcuts.
9	Voicemail access	N/A	Gives a quick access to the handset Voicemail. This is a system dependent feature.
10	Key lock, and Upper and Lower case	N/A	Used for: • Locking the keypad in combination with the soft key **Lock**. • Switching between upper or lower case and digits.
11	Microphone		-
12	Space	N/A	Adds space between text.
13	Sound off key	N/A	Used to: • Turning on or off audible signals in an idle mode. • Silencing the ring signal at incoming call. • Turning the microphone on or off during a call.
14	Tactile indicators	N/A	Indicates the centre of the key pad.
15	On hook and On/Off key		Used as a combined button: • To end a call • To return to the standby mode

Table continues…

Callout number	Name	Button Icon	Description
			• To switch the handset on or off by long press
16	Color display	N/A	The full graphic type display is a 1.77 inch TFT. The display has multiple colors and backlighting.
17	Headset connector	N/A	The headset connector is for connecting a headset. The connector is protected against dust by using the headset connector cover.

Avaya 3735 DECT handset

Important:

The handset may retain small magnetic objects around the mouthcap or earcap region.

Parts of the handset	Description
Case	The plastic cover parts are made of durable PC/ABS material.
Antenna	The antenna is integrated inside the handset.
Loudspeaker	The handset has a separate loudspeaker for the loudspeaker function. The loudspeaker is placed on the back side of the handset.
Microphone	The microphone is placed on the front bottom side of the handset.
Clip	There are two different belt clip options to the handset: a hinge-type clip (standard) or a swivel-type clip. Use the clip to attach the handset to a belt or similar. You can use the handset without any clip.
Battery	The battery is a rechargeable Li-Ion battery, placed under a battery cover. The battery is fully charged within four hours.

Functions

Note:

Some functions are license/system dependent or require settings in handset via WinPDM/ Device Manager.

Table 1: Functions of 3735 DECT handset

Functions	3735	3735 Alarm
General		
Easy registration	✔	✔
Enhanced DECT Security	✔	✔
Vibrator	✔	✔
Headset connector	✔	✔
Loudspeaking function	✔	✔
3 Programmable Soft keys	✔	✔
9 Programmable Hot keys	✔	✔
Profiles	✔	✔
System profiles	✔	✔
Shared phone	✔	✔
Contacts (250 contacts)	✔	✔
Central phonebook	✔	✔
Company phonebook (1000 contacts)	✔	✔
Downloadable languages	✔	✔
Multifunction button	✔	—
Programmable Navigation key	✔	✔
Upgradable to Messenger	—	—
Upgradable to Protector	✔	—

Table continues…

Functions	3735	3735 Alarm
Centralized management	✔	✔
Personalized menus	✔	✔
Easy replaceable battery	✔	✔
Easy replacement of handset	✔	✔
Handset restrictions	✔	✔
Bluetooth	✔	✔
Telephony		
Push to Talk (PTT)	✔	✔
Procedure call	✔	✔
Voicemail access	✔	✔
Microphone on/off during call	✔	✔
Five predefined emergency numbers	✔	✔
Messaging		
Mini messaging (12 characters)	—	—
Data Send	✔	✔
Colored messaging	✔	✔
Interactive messaging	✔	✔
Data with prefix	✔	✔
Alarm		
Push button alarm	—	✔
Acoustic Location Signal (ALS)	—	✔

Table continues…

Functions	3735	3735 Alarm
Alarm with data	—	✔
Location		
Location, base stations	✔	✔

Accessories

- Desktop charger
- Desktop programmer
- Charging rack
- Battery pack charger
- Carrying case
- Belt Clip
  - hinge-type
  - swivel-type
- Security cord
- Headset with microphone on boom
- Headset with microphone on cable
- Bluetooth headset

DC3 Desktop Charger and DP1 Desktop Programmer

Figure 1: Chargers

You can use any of the following chargers:

- DC3 Desktop charger: Charges the handset only. The charger is delivered with a plug-in power supply and connected to an ordinary wall socket.
- DP1 Desktop Programmer: Downloads new software and synchronizes parameters. The handset becomes fully operational when you keep it in a charger.

Note:

Use the charger within the temperature range of +5° C – +40° C.

CR3 Charging Rack

The CR3 Charging Rack is used for:

- Charging several handsets
- Synchronizing parameters
- Downloading software

The built in power supply can charge up to six handsets.

Battery pack charger

The battery pack charger is used for charging upto six spare batteries.

373x Accessories

Belt Clips

The two belt clip options are:

- Hinge-type clip: The clip on the back of the handset is used to fasten the handset to a belt or similar. The clip can also be changed to a swivel-type.
- Swivel-type clip: The ordinary belt clip can be replaced with a special swivel-type belt clip that is adapted to firmly place your handset onto your belt.

Note:

The handset can be used without any clip on.

Security Cord

The security cord is 800 mm long and is attached directly to the handset.

Carrying case

The carrying case is especially designed for the handset and comes with a swivel type belt clip. The handset is fully operational while placed in the carrying case.

Headset

A headset is recommended if the handset is frequently used or the user want to have both hands free.

The headset comes in the following three versions:

- Microphone integrated in the cable

- Microphone on a boom
- Hearing protection

In order to achieve optimal audio quality with the different headset types it is recommended to select the corresponding headset profile

Icons and text in the display

All functions and settings available to the user are shown as icons and text in the display. The icons and text in the display indicate functions and settings to which you have access. The display normally displays date and time, the Owner ID and telephone number. The Owner ID can manually be set by the user.

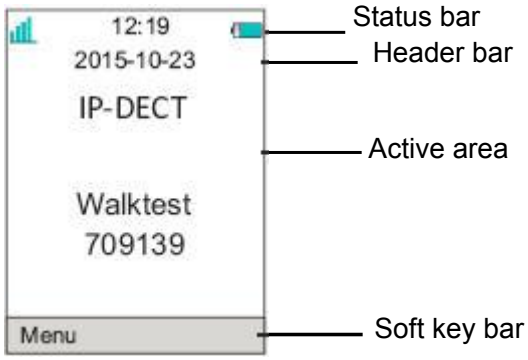

Figure 2: Example of a display configuration in idle mode

Name	Description
Status bar	This is the top row that is used for icons which provide information for signal strength, missed call, new message, phone lock, key lock, sound off, time and battery status. This row is always visible in all screens.
Header bar	This row displays the current date, headset connection, **Bluetooth** connection, and system connection.
Active area	This row contains information such as, profiles, the name of the system to which the handset is connected. A user identity provided from the system and/ or an Owner ID can also be displayed if configured in the **Settings** menu. This is also the area for pop up text for example, missed calls or to confirm an action.
Soft key bar	This row is used for soft keys that can be used as shortcuts for functions in the handset.
Scroll bar	This is the bottom row that is placed to the right side of the active area. It becomes visible when a menu screen has more than six menus, or if the complete text in a message cannot be displayed on the screen simultaneously.

Icons

Icon	Name	Description
	Signal strength	This icon is visible in the upper left corner. The staples shown in display depends on the signal strength.
	Full battery	This icon is displayed in upper right corner.
	Low battery warning	This icon is shown when the battery has 10% or less remaining capacity left.
	Empty battery warning	This icon is flashing when the battery has 5% or less remaining capacity left.
	Mute and PTT	This icon is displayed when the **Sound off** key or **Mute** is pressed.
	Microphone off	This icon indicates a silenced microphone. It is displayed after a long press on the **Sound off** key, **Mute** during a call.
	Silent volume	This icon is displayed when the volume has been set to **Silent**.
	Loudspeaking	This icon is displayed in the soft key bar during a call. Pressing this icon turns on the loudspeaker.
	Loudspeaking off	This icon is displayed after the soft key for **Loudspeaking** icon has been pressed. Pressing this icon turns off the loudspeaker.
	New message	Also known as **Interactive message**, this icon indicates that a new text message (or messages) has arrived. The icon remains in the status bar until all new messages in the inbox are read.
	Request for answer	This icon in front of a message indicates that this message must be acknowledged or rejected.
	Voicemail message	This icon is displayed in the status bar when there are voicemails. The icon remains until voicemail has been listened to.

Table continues…

Icon	Name	Description
		This icon is displayed in the message inbox when there are voicemails. The icon remains until voicemail has been listened to.
	Read message	Also known as **Read Interactive message**, this icon in front of a message shows that this message once has been read.
	Sent message	This icon is displayed when a message is delivered to its recipient.
	High prio	Also known as **Alarm prio**, this icon indicates high priority of a message.
	Key lock	This icon indicates a locked keypad.
	Locked entry	This icon indicates that the contact cannot be edited or deleted by the user.
	Phone lock	This icon indicates a locked handset.
	Bluetooth	This icon indicates that bluetooth is enabled.
	Bluetooth headset	This icon indicates that bluetooth headset is connected to the handset.
	Headset	This icon indicates that a corded headset is connected to the handset.
	Outgoing call	This icon is added to all outgoing calls in the call list.
	Incoming call	This icon is added to all answered calls in the call list.
	Push-to-talk	This icon is added to all incoming, outgoing, missed and answered PTT calls in the call list or missed calls. **Note:** The icon is added when a **PTT** invitation is managed as a call only.

Table continues…

Icon	Name	Description
	Missed call	This icon is added to all missed calls in the call list.
	Missed call	This icon indicates missed calls in the status bar.
	WinPDM/Device Manager communication	This icon is visible when handset is communicating with **WinPDM** or **Device Manager** via advanced charger.

Menu Icons

Icon	Name	Description
	Contacts	Contains all names or numbers in the **Contacts** list. In addition, a company phonebook* with up to 1000 entries can be downloaded to the handset via the WinPDM. A central phonebook* can also be accessed from the **Contacts** menu. The asterisk (*) denotes system dependency.
	My favorites	Contains menu shortcuts used to customize own menu.
	Messaging	Contains all message handling such as reading and writing messages.
	Calls	Contains call lists, call time, and call services*. Call services is configured in the **WinPDM** or **Device Manager**. The asterisk (*) denotes system dependency.
	Connections	Contains **Bluetooth** connection, **Headset** selection, System selection, and **In charger** selection.
	Settings	Contains personal handset settings such as changing the ring volume, selecting language.

Table continues…

Icon	Name	Description
	Shortcuts	Contains shortcuts for: • **Soft keys** • **Hot keys** • **Navigation keys** • **Multifunction** **Note:** 3735 Alarm does not support **Multifunction**.
	Profiles	Allows up to four different profiles to be added. The **Normal** profile is active by default.

373x Keys and buttons

Icon	Name	Description
	Off-hook key	This key is used for connecting calls. One short press in standby mode opens the call list.
	On-hook and On/Off key	This key is used for disconnecting calls and returning to main screen. A long press in standby mode switches the handset on or off.
	Navigation/Confirmation Key	This key is used to step in the menu and when working in text mode. The picture on the left shows how to press the navigation key to step left or right and up or down in the menu. The navigation key can be programmed. **Up** is by default a shortcut to the **Inbox** and **Down** is a shortcut to **Call contact**. During a call the volume can be increased or decreased by pressing up and down on the navigation key.
	Sound off key	A long press on the key in idle mode, changes between ring signal on or off. At incoming call, a short press on the key silences the ring signal. During a call, a long press on the key changes between microphone on or off.

Table continues…

Icon	Name	Description
N/A	**Mute** and **PTT** button	A long press on the **Mute** in idle mode, changes between ring signal on or off, at incoming call, a short press on the button silences the ring signal. During a call, a long press on the button changes between microphone on or off. During a **PTT** call, the microphone is silenced when **PTT** is released.
	Key lock, and Upper and Lower case key	This key is to lock the keypad in combination with the soft key Lock. It is also for switching between upper and lower case and digits.
	Soft keys	The three **Soft keys** are located just beneath the display. The functions of each soft key is indicated by text in the display just above the keys. In idle mode, the **Soft keys** can be used for specific functions defined by the user of the handset.
-	**Hot keys**	Any key between **2** and **9** can be set to a **Hot** key. A long press on any of these numbers in stand by mode are by default a shortcut to the Call contact list. The list is in an alphabetic order, and depending on which key that is pressed is dependent on where in the list the contact appears. A **Hot** key can be programmed to give access to frequently used functions such as dialling a specific handset number, a shortcut on the menu, or sending an SMS.
-	**Multifunction**	The button is used as a shortcut to functions; long or double press modes. By default it is not used, but can be defined by the user of the handset. If the button is defined, it can be used in standby mode only.

Table continues…

Icon	Name	Description
		Note: The support for this feature is dependent on what model of handset is used.
-	**Volume** button	The two buttons placed on the upper left side of the handset are used for increasing or decreasing the earpiece, headset, and the loudspeaker volume.

Chapter 3: Menu Tree

Calls

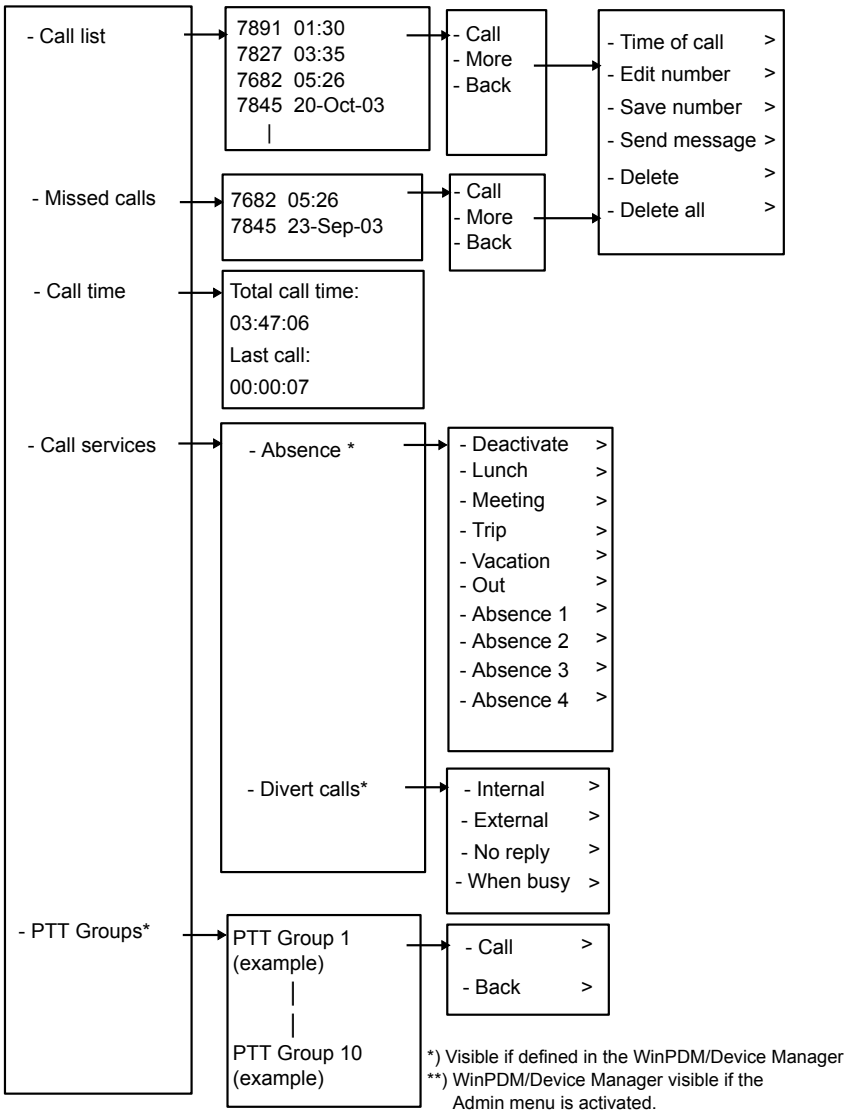

Contacts

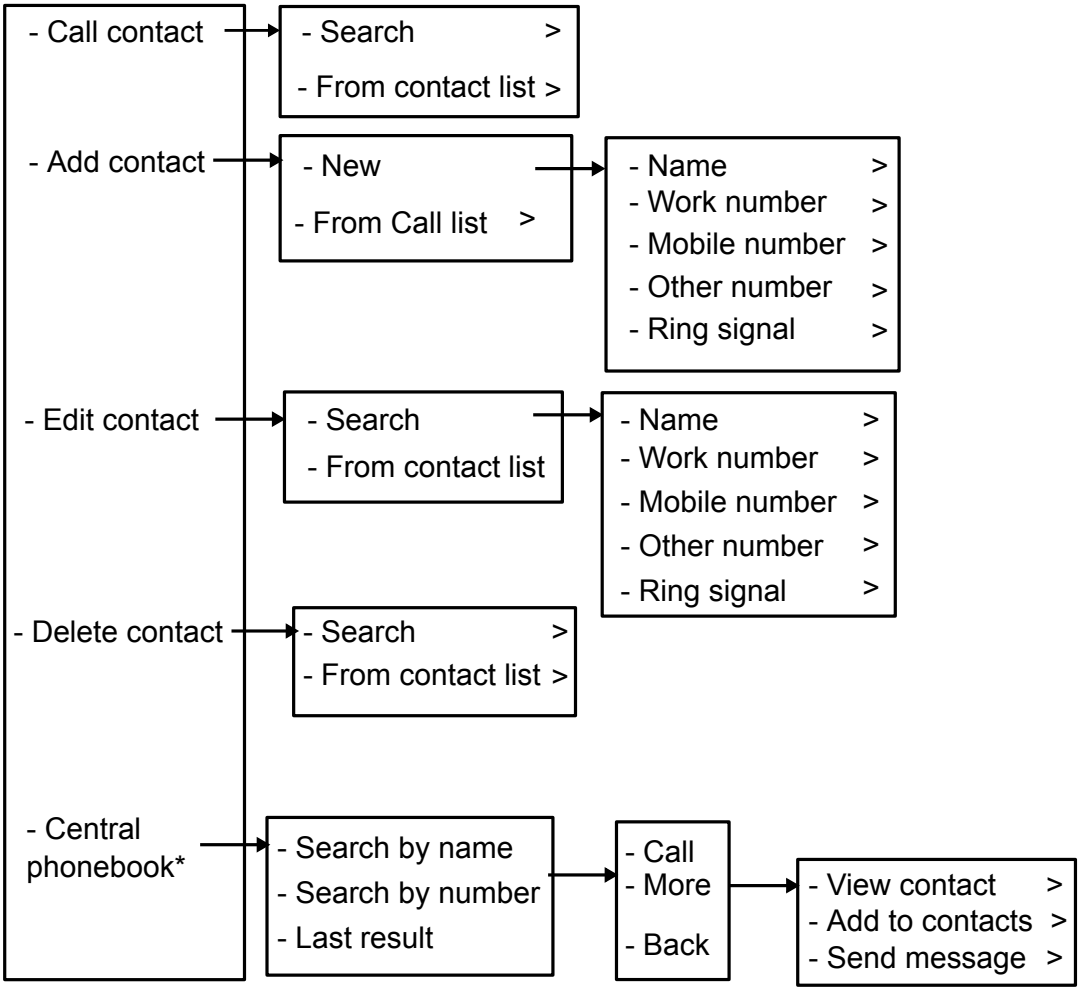

Tip:

When adding or editing a number in a contact, a variable or the character U in the Work/Mobile/Other number field can be added that allows the user to enter one or more additional numerical characters before calling the number.

Profiles

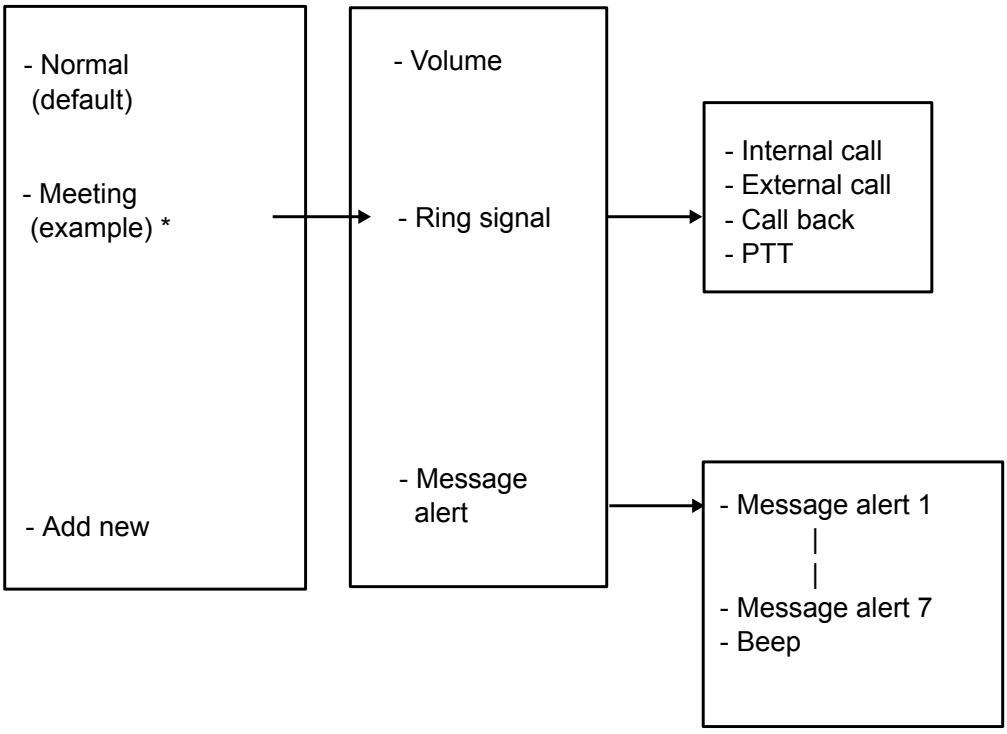

*This example profile does not have all applicable settings.

Messaging

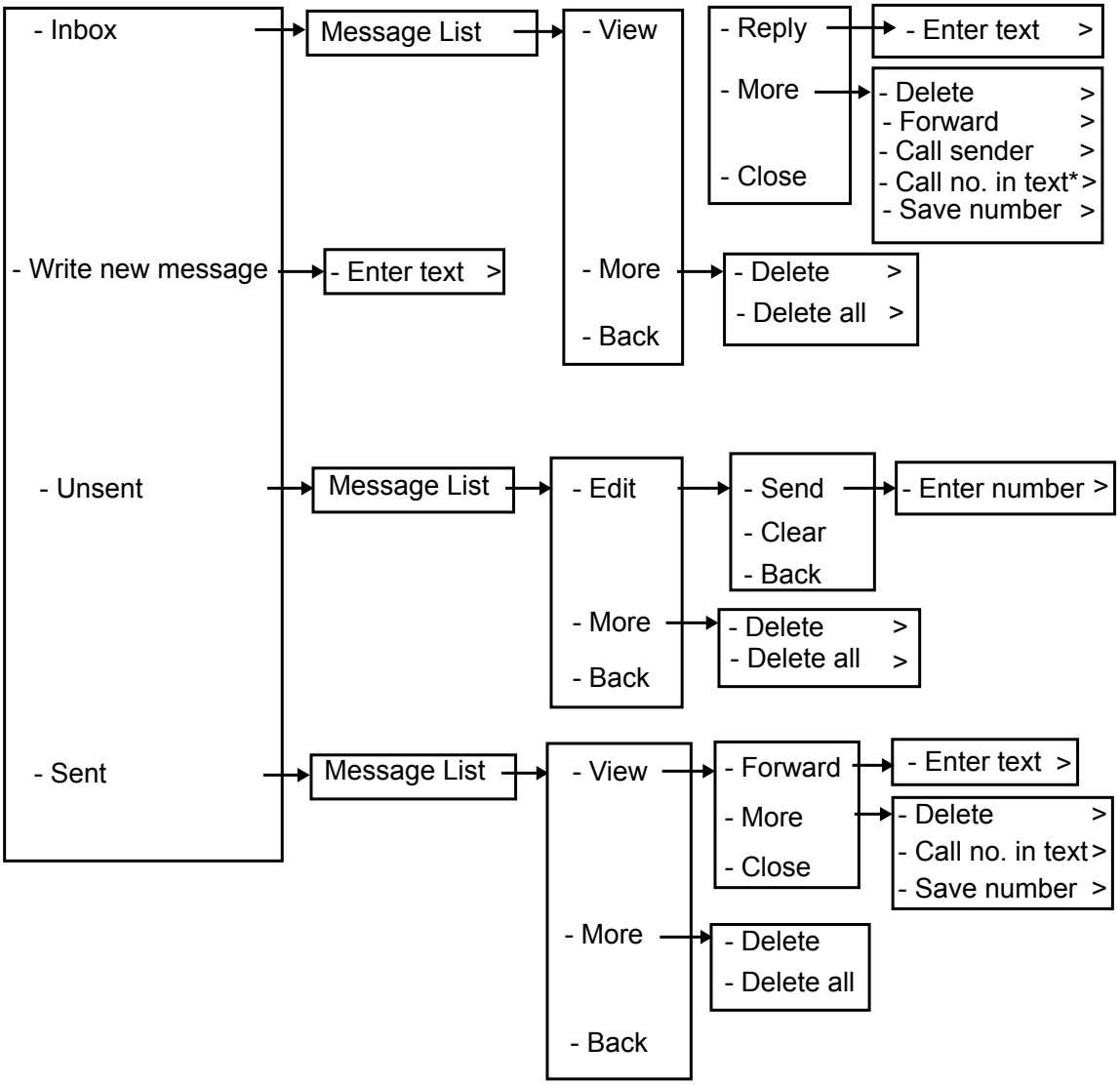

* Visible if the number consists of minimum 3 digits.

My favorites

When configuring the **Phone call** function, a variable or the character `U` can be added to the **Enter number** field to allow the user to enter one or more additional numerical characters before calling the number.

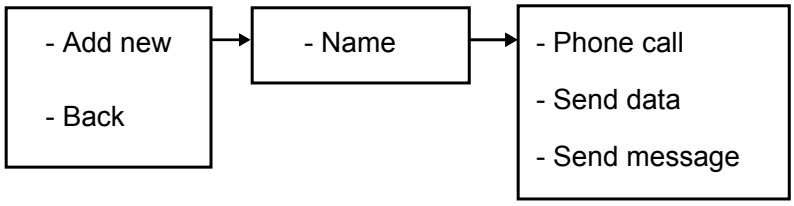
- Add new
- Back
- Name
- Phone call
- Send data
- Send message

Shortcuts

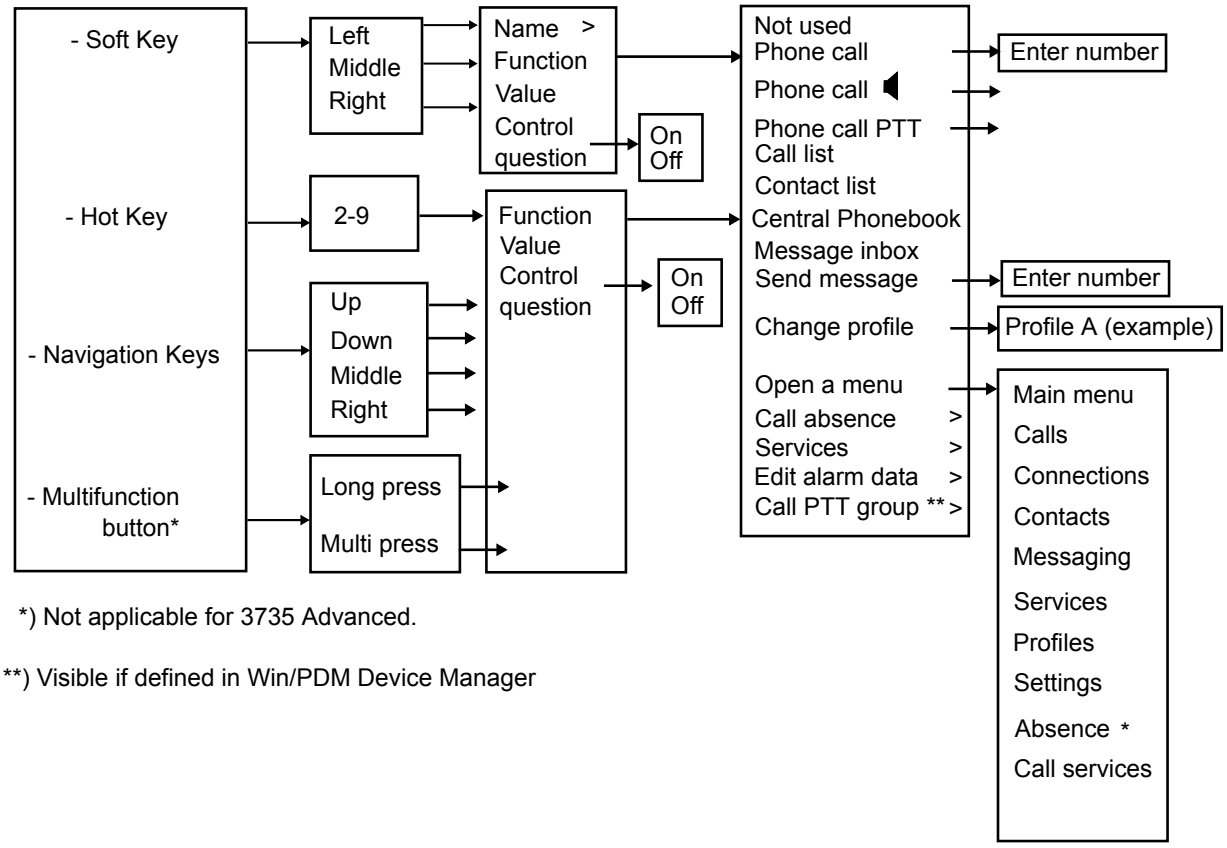

*) Not applicable for 3735 Advanced.

**) Visible if defined in Win/PDM Device Manager

When configuring the **Phone call** function, a variable or character `U` can be added to the **Enter number** field that allows the user to enter additional numerical character(s) before calling the number.

Connections

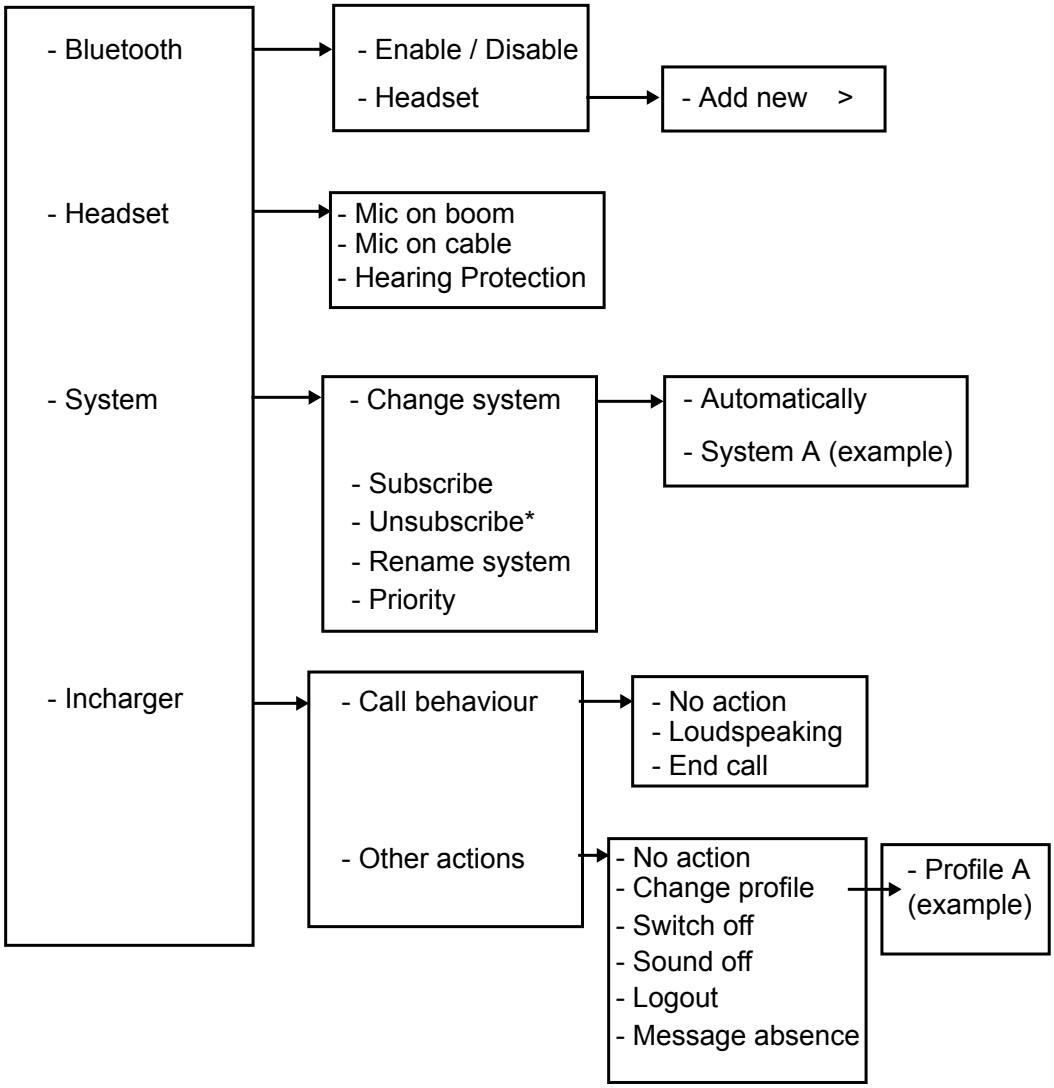

*) It is not possible to unsubcribe a protected system via the System menu.
Unsubcribtion of the system must be made via the Admin menu or the DECT system.

Settings

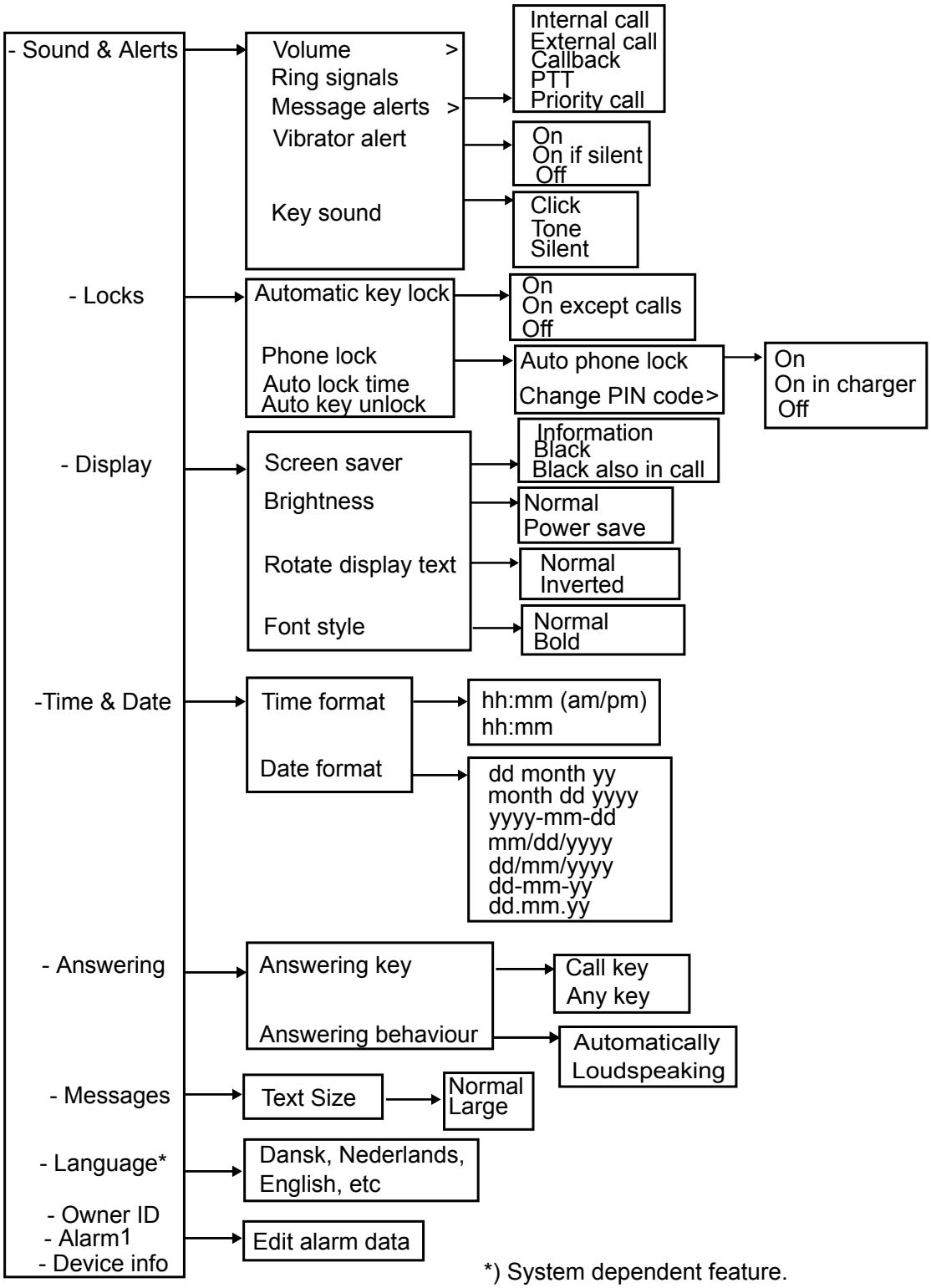

*) System dependent feature.

In call

The **In Call** menu displays a list of functions that can be accessed during a call. You can view the available functions by pressing the **More** soft key. Some functions are always provided and others may be made available by the administrator via the WinPDM/Device manager. To use a function, navigate the **In Call** menu to highlight the required function and then press the **More** soft key.

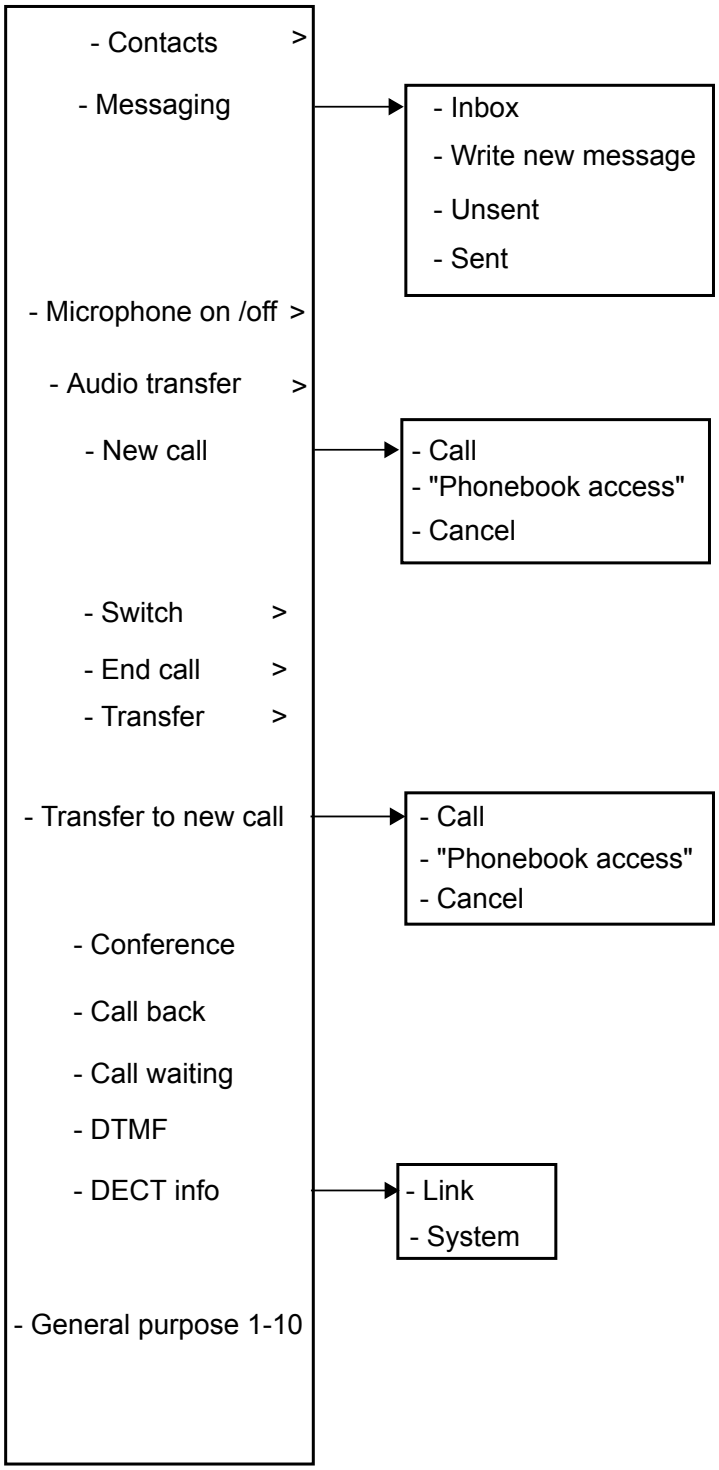
- Contacts >
- Messaging
- Inbox
- Write new message
- Unsent
- Sent
- Microphone on /off >
- Audio transfer >
- New call
- Call
- "Phonebook access"
- Cancel
- Switch >
- End call >
- Transfer >
- Transfer to new call
- Call
- "Phonebook access"
- Cancel
- Conference
- Call back
- Call waiting
- DTMF
- DECT info
- Link
- System
- General purpose 1-10

Note:

When you make a call from a locked handset, the system displays limited functions in the **In Call** menu. When you make a call from an unlocked handset, the system displays the entire menu.

Additional In Call functions

Besides the default **In Call** functions, up to 10 extra system specific codes or general purposes can be defined.

Customizing the menu tree

The menu tree can be customized by hiding some of the functions that are available but not in use.

The functions that can be hidden are defined in the WinPDM.

Chapter 4: Basic operation

Switching the handset on

Procedure

1. Press and hold the **On-hook and On/Off** ( ) key.

   The handset vibrates when it is on and the display lights up followed by a confirmation message.

2. Press **Yes**.

Switching the handset off

Before you begin

The handset must be in an idle mode.

Procedure

1. Press and hold the **On-hook and On/Off** ( ) key.

   The system displays the Switch off? window.

2. To confirm, press **Yes**.

   If a handset is shared and one of the users logs off the shared handset, the lock that prevents the handset from unauthorized use is deactivated.

Log in or out of a shared phone

Note:

The shared phone functionality is applicable in IP-DECT systems only.

More than one user can use the handset with the shared phone feature. When a handset is configured to be a shared phone, it can be used by any shared phone user in the system. The message and call lists are deleted when a user logs off a handset.

If the handset is configured in the WinPDM or Device Manager, an emergency call can be made from a handset that is logged off.

Logging onto a handset

Before you begin

The handset must be switched on.

Procedure

1. A Login? dialog window appears. Press **Yes**.
2. Enter `User ID` and `password`.
3. Press **Login**

   The user will be automatically logged out from a previously used handset.

Logging off a handset

Procedure

1. Press and hold the **On-hook and On/Off** ( ) key.

   The system displays the Logout? window.
2. Press **Yes**.

   If a phone is shared and one of the users logs off the shared phone, the lock that prevents the handset from unauthorized use is deactivated.

Turning the audible signal on or off

About this task

Use this procedure to turn the audible signal on or off.

Before you begin

The handset is in idle mode or rings.

Procedure

Long press the **Sound off** (#) key or the **Mute** button.

The status of the handset changes between ring signals on or off. The icon indicates a silenced handset.

Locking and unlocking the keypad

Locking and unlocking the keypad in idle mode

About this task

Use the following procedure to lock the keypad and prevent pressing the keys accidently.

Procedure

Lock the keypad during a call.

1. To lock the keypad, press the **Key lock, and Upper and Lower case** (* ⇧ ?) key.

   Press and hold this key for a few seconds until the **Lock** soft key appears.

2. Press the **Lock** soft key.

Unlock the keypad during a call.

3. To unlock the keypad, press the **Key lock, and Upper and Lower case** (* ⇧ ?) key.

   The system displays the message `Unlock?`.

4. Press the **Yes** soft key.

   Note:

   You can answer an incoming call or press an alarm button when the keypad is locked. If the WinPDM or Device Manager has an emergency call configured, you can make an emergency call when the keypad is locked.

Locking and unlocking the keypad during a call

About this task

Use this procedure to lock the keypad during a call and prevent pressing the keys accidentally. This is useful when a headset is used and the handset is attached to a pocket or a belt.

Procedure

Lock the keypad during a call.

1. To lock the keypad, press the **Key lock, and Upper and Lower case** (*⇧ʔ) key.

   Press and hold this key for a few seconds until the **Lock** soft key appears.

2. Press the **Lock** soft key.

Unlock the keypad during a call.

3. To unlock the keypad, press the **Key lock, and Upper and Lower case** (*⇧ʔ) key.

   The system displays the message `Unlock?`.

4. Press **Yes**.

   Note:

   During a call, the **Volume** button and **Alarm** button can be pressed while the keypad is locked.

   Depending on the model of the handset used, you can press the **Alarm** button also.

Locking and Unlocking the handset

About this task

The handset can be protected for unauthorized use. If this function is activated, a PIN code has to be entered, for example, to switch on the handset, to answer an incoming call etc. The default phone lock code (0000) can be changed to any 4 - 8 digit personalized code.

If a phone is shared and one of the users logs off the shared phone, the lock that prevents the handset from unauthorized use is deactivated.

Procedure

1. Press **Menu**.
2. Select **Settings**.
3. Select **Locks**.
4. Select **Phone lock**.
5. Select **Auto phone lock**.
6. Select **On**, **On in charger**, or **Off**.

   Note:

   You can define a handset with predefined emergency numbers that can be called while the handset is locked.

Note:

Depending on the model of the handset, you can use an **Alarm** button.

The **Lock** function is deactivated when a one of the user logs off the shared phone.

Muting ringtone for incoming call or message

About this task

You can mute the handset ringtone on an incoming call or message. The call is not hung up when the ringtone is muted. If the call is unanswered, it will revert to voicemail if the handset has been configured for voicemail.

Procedure

Press the **Sound off** (#) key or the **Mute** ( ) button while the handset is ringing.

Chapter 5: Configuring Bluetooth Headset

Introduction to Bluetooth

The **Bluetooth** technology replaces the cord between the cordless handset and the headset. This allows the user to move more freely and eliminates the risk of a headset cord getting stuck.

The **Bluetooth** is factory mounted on the circuit board of the cordless handset.

The **Bluetooth** supported functions are:

- Pair the cordless handset with it's headset.
- Choose which device to use when making a call.
- Play ring signal in the **Bluetooth** headset.
- Answer and connect sound to the **Bluetooth** headset when answering with the button of the headset.
- End call using the button of the **Bluetooth** headset.
- Transfer audio to or from **Bluetooth** headset during a call, using the menu in the cordless handset.
- Increase or decrease the volume in the **Bluetooth** headset with the volume buttons on the cordless handset.

Wear

For optimal performance wear the **Bluetooth** headset and the handset on the same side of your body. You can achieve the best audio quality in the headset when there is no obstruction between the headset and the cordless handset.

Headsets

A number of **Bluetooth** headsets for different work situations have been tested together with the handset.

Since the **Bluetooth** supports the **Bluetooth** 2.0 standard, other headsets may also work although not verified by Avaya.

Note:

Your **Bluetooth** headset may have more or less functions than described here.

Operation

Step between the menus with the navigation key. Confirm each menu selection by pressing the soft key **Select**.

Enabling a Bluetooth connection

Procedure

1. Press **Menu**.
2. Select **Connections**.
3. Select **Bluetooth**.
4. Select **Enable**.

   The system displays the `Bluetooth enabled` message.

   The system displays a **Bluetooth** ( ) connection icon in the header bar.

Disabling the Bluetooth connection

Procedure

1. Press **Menu**.
2. Select **Connections**.
3. Select **Bluetooth**.
4. Select **Disable**.

   The system displays the `Bluetooth disabled` message.

Pairing or Connecting bluetooth headset

About this task

To use a **Bluetooth** headset, pair it first with the handset. It is only needed to pair the **Bluetooth** headset once. A paired **Bluetooth** headset is automatically connected, as indicated by the icon in front of the headset.

Procedure

1. Set the **Bluetooth** headset in pairing mode.
2. Enable **Bluetooth**.
3. Press **Menu**.
4. Select **Connections** > **Bluetooth**.
5. Select **Headset**.
6. Select **Add new**.

   The system displays the `Put headset in Pairing mode` message.
7. Press **OK**.

   The system searches for a **Bluetooth** headset connection.
8. When headset is found, press **Pair**.
9. **(Optional)** Enter the `PIN` code.
10. Press **OK**.

    If the pairing is successful, the system displays `Successful pairing`. The **Bluetooth** headset is connected and indicated by the **Colored square** ( ) in front of the headset.
11. To add another headset, perform steps 1–6.

    Upto 8 headsets can be paired to the handset, but only one headset at a time can be selected. The system displays the paired headsets by a default name in the handset menu **Headset**.

Selecting a Bluetooth headset

Procedure

1. Press **Menu**.
2. Select **Connections**.
3. Select **Bluetooth** > **Headset**.
4. Select a headset by pressing up or down on the navigation key.

5. Press **Select**.

   The system displays the message: `Connection successful is displayed`.

   The headset is selected.

   When a new headset has been selected any previous headset automatically gets disconnected.

Removing a headset

Procedure

1. Press **Menu**.
2. Select **Connections**.
3. Select **Bluetooth** > **Headset**.
4. Select a headset by pressing up or down on the navigation key.
5. Press **More**.
6. Select **Delete**.
7. Press **OK**.

Changing the name of Bluetooth headset

About this task

The name in the headset list of the headset is the default name for the headset. Use this procedure for changing the name of the **Bluetooth** headset.

Procedure

1. Select **Connections**.
2. Select **Bluetooth** > **Headset**.
3. Step with the navigation key, ▲ or ▼ to select the headset.
4. Select **More** > **Edit name**.

Changing the headset profile

About this task

Use this procedure to select an appropriate headset type to achieve optimal audio quality.

Procedure

1. Press **Menu**.

2. Select **Connections**.
3. Select **Headset**.
4. Select one of the following :
   - **Mic on boom**: Optimizes audio.

     This option is the default setting.
   - **Hearing protection**: Reduces the noise exposure level and the risk of hearing loss.
   - **Customized headset profile**: Is visible if the headset profile is configured in WinPDM or Device Manager.
5. Press **Select**.

Calling

Making a call

Procedure

1. Dial the number on the handset.
2. Press **Call** or the **Off-hook** key.

   The system displays `Transfer call to phone?` message.
3. Do one of the following:
   - To use the **Bluetooth** headset, press **No** or ignore the message.
   - To use the handset, press **Yes**.

Answering a call

About this task

A ring signal sounds in both the selected bluetooth headset and the handset to signal an incoming call.

Procedure

Do any of the following:

- To answer the call in the bluetooth headset, press the button on the headset.
- To answer the call in the handset, press **Off-hook** key.

Ending a call

Procedure

Do any of the following:

- To end the call in the bluetooth headset, press the button on the headset.
- To end the call in the handset, press the **On-hook** key.

Volume and Mute Control

Adjusting the volume during a call

Procedure

On the upper left side of the handset, press **Volume up** to increase the volume and **Volume down** to decrease the volume.

Note:

Depending on the **Bluetooth** headset it might be possible to adjust the volume directly on the headset.

Turning microphone on or off during a call

Procedure

Turn the microphone off.

1. To turn the microphone off, do the following:
   a. Press **More** during the call.
   b. Select **Microphone off**.
   c. Press **Select**.

   The icon indicates a silenced microphone. This means that the other party in an ongoing call cannot hear you.

Turn the microphone on.

2. To turn the microphone on, do the following:
   a. Press **More** during the call.

b. Select **Microphone on**.

c. Press **Select**.

You can also turn the microphone on and off by long pressing the **Sound off** (#) key or the **Mute** ( ) button. A short beep is also heard indicating that the microphone is turned on or off.

When you press the **Mute** ( ) button in a PTT call, no beep is heard.

Messaging

When you receive a text message during an ongoing call, a beep sounds in the bluetooth headset.

Transfer a call

Transferring a call to the handset

About this task

Use this procedure for transferring a call to the handset while you are on a call with the **Bluetooth** headset.

Procedure

1. Press **More**.
2. Select **Audio transfer**.

Transferring a call to the Bluetooth headset

About this task

Use this procedure for transferring a call to the**Bluetooth** headset while you are on call with the handset.

Procedure

1. Press **More**.
2. Select **Audio transfer**.

Switching to a headset with a cord

Before you begin

You must on a call.

Procedure

To transfer the call to the headset automatically, connect the headset with a cord.

Operation Notice

Accessibility and voice quality

The base network is not always available. If you cannot connect with your system, contact your system administrator. For best voice quality, avoid positioning near computer, radio or similar equipment.

Operating area

You can only use your cordless handset in the area that is covered by your system. Outside this area, you will loose contact with the system. The signal strength icon will be low and `Searching` is displayed.

Out of Range

When you leave the system's coverage area a short beep will sound and `Searching` is displayed. The out of range beep is repeated every minute for 30 minutes. The sound can be turned off by long pressing the **Sound off** (#) key , or .

When re-entering the coverage area it can take a couple of minutes before the handset automatically has registered into the system.

Troubleshooting

Problem	Reason	Solution
No headset found	Headset is turned off	Turn on the headset
	Headset is out of battery	Charge headset
	Headset is out of range	Move the headset closer to the handset < 10 meter.
	Headset is not in pairing mode	Turn headset into pairing mode.
Pairing fails	Headset is not in pairing mode	Turn headset into pairing or discoverable mode.

Table continues…

Problem	Reason	Solution
	Incorrect PIN entered	Try again and enter correct PIN.
Connecting fails/Failed to connect headset	Headset is not turned on	Turn on the headset
	Headset is out of range	Move headset closer to the handset
	Link key in headset has been deleted	Repeat pairing procedure
	Headset is already connected to another handset	Disconnect headset from the other handset
	Too close to disturbing devices.	Disturbing devices can be WLAN equipment, microwave, and so on.
Headset can not connect to the handset	Handset is not turned on	Turn the handset on
	Handset is out of range	Move the handset closer to the headset
	Bluetooth module is disabled	Enable **Bluetooth** in **Bluetooth** menu
	Another headset is already connected to the handset	Disconnect the connected headset
	Link key is missing in either headset or the handset.	Repeat pairing procedure
	Too close to disturbing devices.	Disturbing devices can be WLAN equipment, microwave, and so on.

Changing the system

Procedure

1. Select **System**.
2. Select **Change System**.
3. Select **Automatic** or a specific system.

   If the handset is set to **Automatic**, it selects a system according to the priority list.

   Automatic cannot be used in both legacy and IP-DECT systems.

Subscribing handset in DECT system

About this task

To subscribe an DECT system manually, you require a Park: (Portable Access Right Key) and Ac: (Authentication code) related to the system.

Procedure

1. Press **Menu**.
2. Select **Connections**.
3. Select **System**.
4. Select **Subscribe**.

   The system displays:

   - IPDI: A unique code that is assigned to the handset.
   - User ID.
5. Press **Next**.
6. **(Optional)** In the **System name** field, enter the system name.

   If you do not enter the system name, the default name is used. For example, System A, System B.
7. Press **Next**.
8. Enter **PARK code** (max. 31 digits). The PARK code is not required if there is no alien DECT system within the coverage area.
9. Enter **AC code**. The AC code length must be between 4 - 8 digits.
10. Press **Next**.

    The system displays the `Protection on?` message.
11. To protect the new system, select **Yes**.

    Note:

    You cannot delete a protected system using the **System** menu. The unsubscription must be made using the **Admin** menu or the DECT system.
12. Press **OK**.

    A searching mode starts.

Unsubscribing the system

Procedure

1. Press **Menu**.
2. Select **Connections**.
3. Select **System**.
4. Select **Unsubscribe**.
5. Select the system to unsubscribe.

6. Press **Yes**.

Renaming the system

About this task

Use this procedure to change the name of the system in the handset.

Procedure

1. Press **Menu**.
2. Select **Connections**.
3. Select **System**.
4. Select **Rename system**.
5. Select the system to rename and press **Edit**.
6. In the **Name** field, enter new name.
7. Press **Save**.

Setting priority

About this task

The default order of priority is the order of entered subscriptions. This means that the first subscribed system has the highest priority. You can edit the priority list and set the systems in priority by moving them up or down in the list.

This priority list is used in combination with the system set to **Automatic**.

Procedure

1. Press **Menu**.
2. Select **Settings**.
3. Select **System**.
4. Select **Priority**.
5. Change the priority by using the navigation key to scroll up and down.
6. To save the priority, select **Back**.

In charger action when in call

About this task

Use this procedure to define the functions of a handset when placed in a charger during a call.

Procedure

1. Press **Menu**.
2. Select **Connections**.
3. Select **In charger**.
4. Select **Call behavior**.
5. Select any of the following:
   - **No action**: No action is performed when the handset is placed in a charger during a call.
   - **Loudspeaking**: The loudspeaker is activated when the handset is placed in a charger during a call.
   - **End call**: The call is disconnected when the handset is placed in a charger.

In charger action when not in call

About this task

Use this procedure to define the functions of a handset when the handset is not on a call and not placed in a charger.

Procedure

1. Press **Menu**.
2. Select **Connections**.
3. Select **In charger**.
4. Select **Other actions**.
5. Select any of the following:
   - **No action**: No action is performed when handset is not in call and placed in charger.
   - **Change profile**: When the handset is placed in the charger it changes profile. When the handset is removed from the charger, the profile is changed back.

     Press **Edit** to select the wanted profile. By default only the profile Normal is visible, and additional profiles are visible only if they are configured.
   - **Switch off**: When the handset is placed in the charger it will switch off. When it is removed from the charger it will switch on again.

     If you enable the handset restrictions, the handset might not be switched off when placed in a charger.
   - **Sound off**: When the handset is placed in a charger it is muted. When the handset is removed from the charger it switches the sound on again. When the handset is switched off in the charger, the system displays the Owner ID of the handset. This simplifies the identification of the handset. For example, when the handset is being charged with other handsets.

If you enable the handset restrictions, the handset might not be muted when placed in a charger

- **Logout**: When the handset is placed in a charger it is logged off. Call list and message list are deleted when the handset is logged out. When it is removed from the charger, the user needs to log in again.

  This feature is applicable in IP-DECT systems only.

- **Message absence**: When an application or system sends a message to a handset, it receives an indication that the handset is absent. If a handset is absent, the application or the system determines if the message is sent to the handset or not, or redirected to another handset.

  If a message is sent from a handset, it does not receive an indication that the recipient is absent. This function must be programmed in the PBX to be able to redirect calls or messages.

  You can configure additional **In charger** actions.

Chapter 6: Menu operation

Managing incoming calls

Incoming call

You get a call alert that is accompanied by a ring signal and / or a vibrating handset.

You can disable a ring signal and a vibrator. The handset number or name of the calling party is shown. The name is shown if the handset number of the calling party is stored in the local phone book.

Answering a call

Procedure

Do one of the following:

- Press the **Off-hook** ( ) or the **Accept** soft key.
- Press to answer the call using the speakerphone.
- Press the headset button to answer the call using the headset.

The name or number of the calling party is displayed if calling line information is available.

Note:

- When you enable **Automatically**, all incoming calls are connected automatically.
- If you decline the call, you can still acknowledge its receipt by sending a predefined text message to the caller.

Declining a call

Before you begin

Your handset must ring.

Procedure

Press the **On-hook and On/Off** ( ) key or the **Decline** soft key.

Ending a call

About this task

Some systems or PBXs require that the handset sends a DTMF in order to end a call.

Procedure

To end a call, press the **On-hook and On/Off** ( ) key.

Declining a call with a predefined message

About this task

To decline a call with a predefined message, both the caller and the call receiver must be connected via an IP-DECT system.

Procedure

1. In response to the “Reply with a message template?” message prompt, press **Yes** to send a message to the caller.

   A list of predefined messages is displayed in the **Templates** menu.
2. Select a predefined message and, if required, edit the message.
3. Press **Send**.

   The handset displays the callers number.
4. Press **Send** again to send the message.

   The handset displays the `Message sent` confirmation when the message is sent to the caller.

Answering a text message with a predefined message

Procedure

1. Press the soft key **Reply**.
2. Press the **More** soft key.

   The **Templates** option is displayed.
3. Press the soft key **Select**.

A list of predefined message template is displayed.

4. Navigate to the required message template and press the **Select** soft key. If required you can edit the message.
5. Press the soft key **Send**.

   The message sender's number is displayed in the handset display.
6. Press the soft key **Send**.

   A "`Message sent`" confirmation is displayed and the message is sent to the caller.

Managing call list

Call list

You can see the last 25 received, dialled, or missed calls that are stored in the call list. If a phone number occurs more than once, the last time stamp and the total number of occurrences are listed. From the menu, you can see call list under **Calls** > **Call list**.

Editing a number from the call list

Procedure

1. Press **Menu**.
2. Select **Calls**.
3. Select **Call list**.
4. Select a number from the call list.

   You can scroll the call list with the up and down arrows on the navigation key.
5. Press **More**.
6. Select **Edit number** to edit the selected number.

Saving a number from the call list

About this task

Saving a number in the call list creates a new contact. However, existing items in the call list are not updated with the contact information.

Procedure

1. Press **Menu**.
2. Select **Calls**.
3. Select **Call list**.
4. Select a number from the call list.

   You can scroll the call list using the navigation key up and down.
5. Press **More**.
6. Select **Save number**.

Sending a message from the call list

Procedure

1. Press **Menu**.
2. Select **Calls**.
3. Select **Call list**.
4. Select a number from the call list.

   You can scroll the call list with the up and down arrows on the navigation key.
5. Press **More**.
6. Select **Send message**.

Deleting entries from the call list

Procedure

1. Press **Menu**.
2. Select **Calls**.
3. Select **Call list**.
4. Select a number from the call list.

   You can scroll the call list with the up and down arrows on the navigation key.
5. Press **More**, and then do the following as required:
   - To delete an entry: Select the entry to delete, and then press **Delete** > **Yes**.
   - To delete all entries: Press **Delete all**.

Viewing missed calls

About this task

By default the system displays the Missed call window and the **Missed calls** ( ) icon.

The dialog window that appears for a missed call can be turned off. The handset can also be prevented from storing calls in the call list. The **Call list** can be used to ensure privacy for users sharing the same handset. These features require configuration in the handset via **WinPDM** or **Device Manager**.

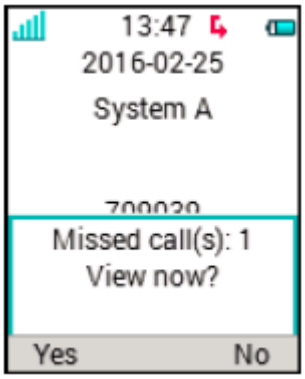

Figure 3: Missed calls

Procedure

The system displays a Missed call window and the **Missed calls** ( ) icon.

1. To view the missed calls, press **Yes**.

The user presses **No**.

2. Press **Menu**.
3. Select **Calls** > **Missed calls**.
4. To scroll in the list, press up and down on the navigation key.
5. To call back, press **Call**.
6. **(Optional)** In a **Call list**, press **More** to view the time and date of the call, edit the received number, add to contacts, and delete the received number.

   If supported by the system, the numbers contact name is displayed in the list.

Viewing the time of a call

Procedure

1. Press **Menu**.
2. Select **Calls** > **Call list**.
3. Select a number from the call list.

   You can scroll the call list with the up and down arrows on the navigation key.
4. Press **More**.
5. Select **Time of call**. The time and date is displayed for the selected number.

   Tip:

   The duration of the last call is displayed under **Call time**.

Push-to-talk group call

The **Push-to-Talk** feature is a group or conference call made to members of a predefined group . If one of the group members wants to contact the others, the member must press and hold the **PTT** button to open the microphone. You can configure the **Multifunction** button to serve as the **PTT** button.

Because the multifunction button is larger than the **PTT** button and located on top of the handset, the user can locate it easily. The smaller **PTT** button is at the side of the handset. Specifically, users who need to wear gloves find the **Multifunction** button easier to use than the **PTT** button.

Some legacy systems or PBXs require that the handset sends a predefined DTMF tone when pressing or releasing .

To participate in the conference, the group members must first accept the invitation received as an incoming call. If a member declines the invitation, the member can rejoin the group or conference later. A member can also invite a group of members to participate in the conference call by calling a PTT group.

The support for the **Multifunction** button depends on the model of the handset used.

Accepting a PTT invitation as an incoming call

About this task

Use this procedure to accept a PTT invitation as:

- An incoming call
- An incoming call during an ongoing call

A PTT invitation received as an incoming call is indicated by the **Push-to-talk** ( ) icon.

Procedure

Accepting a PTT invitation as an incoming call:

1. Press **Accept** or the **Off-hook** (📞) key.

   By default, the handset starts in the inverted mute and loudspeaking modes, but you can configure it differently in a PTT group.

2. To open the microphone for transmitting, press and hold the **Push-to-talk** ( ) button. When you release the **Push-to-talk** button, the microphone is muted again.

   The **Multifunction** button can also be configured to function as the **Push-to-talk** button.

Accepting a PTT invitation as an incoming call during an ongoing call:

3. Press **Accept**.

   The system disconnects the ongoing call and connects to the PTT call.

Accepting a PTT invitation as a message

About this task

Use this procedure to accept a PTT invitation that you receive as:

- A message
- A message during an ongoing call

When you receive an invitation, the system sends a warning signal before disconnecting the current call and connecting to the PTT call. A PTT message can contain up to 1000 characters.

Procedure

Accepting a PTT invitation as a message.

1. Press **Accept**.

   Depending on the configuration of the invitation, the handset accepts the invitation automatically, and relays the message in inverted mute and loudspeaking modes.

2. To open the microphone for transmitting, press and hold the **Push-to-talk** ( ) button. When you release the **Push-to-talk** button, the microphone is muted again.

Accepting a PTT invitation as a message during an ongoing call.

3. Press **Accept**.

   The system displays the message.

Configuring a PTT call to connect directly

About this task

Use this procedure to connect to the PTT call directly when you receive the PTT invitation as:

- An incoming call during an ongoing call

- A message during an ongoing call

Procedure

To disconnect from the ongoing call and connect to the PTT call directly, ensure that:

- You have configured the handset to answer invitations automatically.
- You do not reject the invitation within 10 seconds.
- The invitation has higher priority than the ongoing call.

Declining a PTT invitation

About this task

Use this procedure to decline a PTT invitation received as:

- An incoming call
- An incoming call during an ongoing call
- A message
- A message during an ongoing call

Procedure

When you get an incoming call:

1. Press **Decline**.

   The handset returns to the previous screen .

When you get a message:

2. Press **Reject**.

Calling a push-to-talk group

Before you begin

Define PTT groups.

Procedure

1. Press **Menu**.
2. Select **Calls PTT groups**.
3. Select a PTT group.
4. Press **Call** or the **Off-hook** ( ) key.
5. **(Optional)** In the idle mode, press the **PTT** button quickly, select a PTT group, and then press the **Call** button.

Rejoining a push-to-talk group

About this task

When you reject or miss the PTT invitation that you receive as a call or a text message, then you can rejoin the PTT group by dialling:

- The **Call list** or **Missed calls**.
- Selecting the message from the **Messaging** inbox.

Procedure

You have received a PTT invitation as a call.

1. Rejoin the PTT group by dialling the **Call list** or the **Missed calls**.

   The system displays the PTT invitation as a **Push-to-talk** ( ) icon.

You have received a PTT invitation as a message.

2. Rejoin the PTT group by selecting a message indicated by the **New message** (✉) icon in the **Messaging** inbox.
3. Press **Call**.

Managing calls in absentia

Call services

These functions are system dependent. Besides the default **Call services** functions, 10 extra system specific call services can be defined with or without automatic disconnection. The parameters are set up in the Portable Device Manager (WinPDM).

Absence handling

Procedure

1. Press **Menu**.
2. Select **Calls**.
3. Select **Call services** > **Absence**.
4. Select the applicable absence reason in the list. The number of absence reasons (for example: “Lunch”, “Meeting”, “Trip”, etc.) are configured in the WinPDM.

   The code is defined when configuring the absence reason in the handset.

5. Press **Select**.
6. Enter time (HHMM) or date (MMDD) depending on the selected absence reason.
7. Press **OK**.

   The handset sends an absence reason code to the system by establishing a call. The call is automatically disconnected after a few seconds.

Deactivating the Absence settings

Procedure

1. Press **Menu**.
2. Select **Calls**.
3. Select **Call services** > **Absence**.
4. Select **Deactivate**.
5. Press **Select**.

Diverting calls

About this task

You can divert internal calls, external calls, calls when busy, and calls on no reply to another phone number.

Procedure

1. Press **Menu**.
2. Select **Calls**.
3. Select **Call services** > **Divert calls**.

   You can create a shortcut to the **Call services** function or activate a call service when a profile is activated.

   You can set the PBX settings for the call diversion to show the **Divert calls** menu in the handset.
4. Select **Activate**.
5. Select any of the following:
   - **Internal** or **External**: Diverts internal or external calls.
   - **No reply**: Diverts calls on no reply.
   - **When busy**: Diverts calls when the handset sends a busy tone or is on another call.
6. Enter the number (maximum 24 digits) to which you want to divert the calls. Alternatively, press the **Call Contact list** (•📖) to see the call contact list.

7. Press **OK**.

   The handset sends a diversion reason code to the system by establishing a call. The call is automatically disconnected after a few seconds.

   The code is defined while configuring the diversion reason in the handset.

Next steps

To stop diversion, select **Deactivate** and press **OK**.

Stopping the diversion of calls

Procedure

1. Press **Menu**.
2. Select **Calls**.
3. Select **Call services** > **Divert calls**.
4. Select any of the following:
   - **Internal** or **External**: Diverts internal or external calls.
   - **No reply**: Diverts calls on no reply.
   - **When busy**: Diverts calls when the handset sends a busy tone or is on another call.
5. Select **Deactivate**.
6. Press **OK**.

Emergency calls

If configured in the **WinPDM** or **Device Manager**, any one of up to five emergency numbers can be called. An emergency number can be called even if the handset or keypad is locked.

Managing Mid-call operations

During a call

When you call from a locked handset, there are limitations to what items in the **In Call** menu are visible. However, the entire menu is accessible when calling from a handset with locked keypad.

Adjusting the volume during a call

About this task

Use this procedure to increase or decrease the volume during an ongoing call.

Procedure

Do the following:

- To increase the volume, press the **Volume up** button.
- To decrease the volume, press the **Volume down** button.
- To adjust the volume using a navigation key, press up or down on the navigation key.

The handset stores and keeps the new volume level.

Opening contacts during the call

About this task

Use this procedure to open contacts while you are on a call.

Procedure

1. Select **More**.
2. Select **Contacts**.
3. To open the contacts, select any of the following:
   - **Call contact**: For searching a local or company phone book contact.
   - **Central phonebook**: For searching a central phone book contact.
4. Press **Select**.
5. Select or search contact.

   The selected contact can be called by pressing **Call**. When calling the contact, the first call is put on hold.

Opening messaging during the call

About this task

Use this procedure to open the **Messaging** menu during an ongoing call.

Procedure

1. Select **More**.
2. Select **Messaging**.

Turning microphone on or off during a call

Procedure

Turn the microphone off.

1. To turn the microphone off, do the following:
   a. Press **More** during the call.
   b. Select **Microphone off**.
   c. Press **Select**.

   The icon indicates a silenced microphone. This means that the other party in an ongoing call cannot hear you.

Turn the microphone on.

2. To turn the microphone on, do the following:
   a. Press **More** during the call.
   b. Select **Microphone on**.
   c. Press **Select**.

   You can also turn the microphone on and off by long pressing the **Sound off** (#) key or the **Mute** ( ) button. A short beep is also heard indicating that the microphone is turned on or off.

   When you press the **Mute** ( ) button in a PTT call, no beep is heard.

Transferring the audio

About this task

Use this procedure to transfer audio between the **Bluetooth** headset and the handset earpiece during the call.

Procedure

1. Select **More**.
2. Select **Audio transfer**.
3. Press **Select**.

Note:

Audio transfer is visible if **Bluetooth** connection is active.

Starting a new call during a call

About this task

Use this procedure to start a new call during an ongoing call.

Procedure

1. Press **More**.
2. Select **New call**.

3. Press **Select**.
4. Enter the number that you want to call or press the **Call Contact list** (•📖) icon to access the phonebook.
5. Press the **Off-hook** (📞) key.

   When the new call connects, the first call is put on hold.

Calling back

About this task

When a call is made to a busy handset, automatically a callback can be made when the busy handset is free. Use this procedure, when you get a busy tone sound.

Procedure

1. Press **More**.
2. Select **Call back**.
3. Press **Select**.
4. Press the **On-hook and On/Off** ( ) key and wait until the handset alerts.
5. When the handset alerts, press the **Off-hook** (📞) key.

   The call starts automatically.

Transferring a call by pressing a key

About this task

Use this procedure to transfer the first call with the second call when you have two ongoing calls.

Procedure

1. Press **More**.
2. Select **Transfer**.

   The **Transfer** option is visible only when it is configured in the handset.
3. Press **Select**.

   This connects the first caller with the new caller. Your call is automatically disconnected.

Transferring a call by dialing a number

About this task

You this procedure to transfer an ongoing call to a new call.

Procedure

1. Press **More**.
2. Select **Transf. to new**.

Transfer to new call is visible only when **New call** and **Transfer** are defined in the handset.

3. Press **Select**.
4. Enter the number of the person where the ongoing call is to be transferred or press the **Call Contact list** (•📖) icon to access the phone book.
5. Press the **Off-hook** ( ) key to transfer the call.

Starting a conference call

About this task

Use this procedure to initiate a conference call between several participants simultaneously.

Before you begin

A new call is started during the conversation.

Procedure

1. Press **More**.
2. Select **Conference**.
3. Press **Select**.

   The person initiating the conference call is the conference leader, and the others are participant members of the conference call.

Toggling between calls

Before you begin

Start a new call.

Procedure

1. Press **More**.
2. Select **Switch**.

   The **Switch** option is only visible if it is configured in the handset.
3. Press **Select** to switch to the other call.

Ending a call

Before you begin

A new call has been started during a conversation.

Procedure

1. Press the **More**.
2. Select **End Call**.

   The **End Call** option is visible only when it is configured in the handset.

3. Press **Select**.

   The handset ends the current call and resumes the previous call.

Sending call waiting

About this task

Use this procedure to notify the engaged party that another call is trying to reach them.

Procedure

1. Press **More**.
2. Select **Call waiting**. The **Call waiting** function is visible, only if the administrator has activated in the handset.
3. Press **Select**.

   The engaged party receives a **Call waiting** signal.

   When the line is free it automatically calls the number again. This is system dependent function.

Answering call waiting

About this task

Use this procedure to answer call waiting when you:

- Receive a short tone for another incoming call during an ongoing conversation.
- Receive a beep from the handset and a text display: **Internal call** for internal callers and **External call** for external callers. The handset also displays the name or the phone number of the second caller.

Note:

You can use **Answer call waiting** function in two different ways depending on the system setup and configuration.

Procedure

During a call, you receive a short tone. To answer the second call, do the following:

1. Press **More**.
2. Select **Answer call waiting**.
3. Press **Select**.

   You connect to the new call and the first call is put on hold. When the line is free, the call on hold is automatically dialled again. This is a system dependent feature.

During a call, you receive a beep and a text display. To answer the second call, do the following:

4. Press **Accept**.

   The system displays the text `Switch` briefly and transfers to the second call. The first call is put on hold.

5. To end the call with the second caller, press **More** > **End call**.

   You disconnect with the second call and connect with the first call.

6. **(Optional)** Press **Decline** to reject a second call.

   The second caller hears a busy tone, and the call is logged as a missed call in the handset.

Enabling DTMF

About this task

Some systems or PBXs require that the handset sends Dual Tone Multi Frequency (DTMF) when pressing the keys. Use this procedure to enable the **DTMF**.

Before you begin

You must be on a call.

Procedure

Do the following:

- Press **More** > **DTMF** > **Select**.
- Press the **On-hook and On/Off** ( ) key, and then press and release the **Sound off** ( ) button.

DTMF is visible only when it is configured in the handset.

DECT Info

DECT info is an advanced function intended for an administrator using the handset to measure RF link and system parameters as part of a troubleshooting or site surveying procedure.

This option is only visible if the **Admin** menu is activated.

Using the loudspeaker

About this task

Use the procedure to activate the loudspeaking function.

Procedure

Do any of the following:

- Press a **Multifunction** button, **Soft** key, **Hot** key, or a **Navigation** key and define it as a shortcut to a **Phone call** ( ) function. When you press a key or a button, a predefined number is called.

  The support for a **Multifunction** button, depends on the model of handset used.

- When receiving a call, press the soft key . The **Soft** key might have another or no function depending on its configuration of the **In call** function in WinPDM or Device Manager.
- During a call, press the soft key . The **Soft** key might have another or no function depending on its configuration of the **In call** function in WinPDM or Device Manager.

- During a call, put the handset in a charger. Requires that the **Loudspeaking** function is chosen in the **In Charger** menu.
- This function can also be activated by selecting another answering method, that is, **Automatically** and or **Loudspeaking**.

Sending data

About this task

Sent data can be used to initiate actions such as:

- Opening a door.
- Starting and stopping a machine.

Procedure

To send user entered data from the handset, do any of the following:

- Press pre-programmed hot key.
- Press pre-programmed soft key.
- Select a service.

  The data can either be predefined, entered after the hot key or soft key is pressed, or send when the relevant service is selected.

Managing outgoing calls

Making a local call

Procedure

1. Enter the number.
2. Press **Call** or the **Off-hook** ( ) key.

   The system displays the number while dialling.
3. **(Optional)** Do the following as required:
   - To erase the number, press **Clear**.
   - To step, add or delete the digits from the middle of a number, use the navigation key.

Making an international call

Procedure

1. Enter a + character followed by the country code and the local number. To enter the + character, long press the **0** key until the system displays the character.
2. Press **Call** or the **Off-hook** ( ) key.

   The system displays the number while dialling.
3. **(Optional)** Do the following as required:
   - To erase the number, press **Clear**.
   - To step, add or delete the digits from the middle of a number, use the navigation key.

Dialing a number with the headset button

Procedure

If a headset is used, use the **Headset** button to obtain a dial tone and dial the last number.

Ensure that the headset is configured using the **WinPDM** or **Device Manager**.

Dialing using a pre-programmed number

About this task

You can programme the following with a handset number:

- **Navigation keys**
- **Hot keys**
- **Soft keys**
- **Multifunction** button

A **Headset** button can also be programmed with a handset number as long as it has been configured by the administrator via the WinPDM or Device Manager.

Procedure

To dial a pre-programmed number, press the pre-programmed key or button.

The call is connected automatically.

Dialing a number from the call list

About this task

Use this procedure to dial a number from the call list when the handset is in the idle mode.

Procedure

1. Press **Menu**.
2. Select **Calls**.
3. Select **Call list**, and then select a number.

   The system displays the call list that you can scroll using the navigation key up and down.
4. Press **Call** or the **Off-hook** ( ) key to dial the selected number.

Dialing last called number with the headset number

Procedure

If a headset is used, use the **Headset** button to dial the last called number.

Note:

Ensure that the headset is configured via the **WinPDM** or **Device Manager**.

Managing contacts

Contacts

The handset has a local phone book with 250 entries, where you can add, delete, and edit names and numbers freely. The phone book lists all names in alphabetical order, where you can add three numbers for each contact: work number, mobile number, and other number.

You can also access a central phone book which is system dependent. You can send a request to a messaging server with the first characters entered, and the messaging server returns a list of names and numbers that matches the search.

In addition, a company phone book with up to 1000 entries can be downloaded to the phone via the WinPDM.

You can download a company phone book through the PDM. It is not possible to edit or delete a company phone book contact. These contacts are indicated by the **Locked entry** ( ) icon before their name. The contacts will include only the work number.

When searching for a contact, the input language can be temporarily changed by long pressing the **Key lock, and Upper and Lower case** (✱ ⇧ 🔑). This can be used to temporarily access characters in a foreign language.

Calling a number from contacts

Procedure

1. Press **Menu**.
2. Select **Contacts**.
3. Select **Call contact**.
4. Select a contact from the list, or search a name or number by entering the characters in the **Search** field.
5. Press **Call** or the **Off-hook** (📞) key.

Calling a contact from the local or company phonebook

Procedure

1. Press **Menu**.
2. Select **Contacts**.
3. Select **Call contact**.

   The local and company phone book contacts appears in the same list. The company names are indicated by the **Locked entry** (🔒) icon for identification.
4. Select a contact from the list, or search a name or a number by entering the characters in the **Search** field.
5. Press **Call** or the **Off-hook** (📞) key to call the contact.
6. **(Optional)** Using **View** > **More**, you can edit the contacts from the local phone book and send a message.

Calling a contact from the central phonebook

Procedure

1. Press **Menu**.
2. Select **Contacts**.
3. Select **Central phonebook**.
4. Search for a contact in any of the following ways:
   a. **Search by name**: Enter the first name and the last name or both.

      You can enter incomplete names and names that include spaces.
   b. **Search by number**: Enter the number.

5. **(Optional)** To search for a contact, you can temporarily change the input language by long pressing the **Key lock, and Upper and Lower case** (*⇧) key. This can be used to access characters in a foreign language temporarily.
6. Press **Search**.

   The system displays the search results.
7. **(Optional)** To view the last search results, select **Central phonebook** > **Last result**.
8. Press **Call** or the **Off-hook** ( ) key to call the contact.

Adding a contact

Procedure

1. Press **Menu**.
2. Select **Contacts**.
3. To add a new contact, select **Add contact** > **New**.
4. Select **Name** and press **Add**.
5. In the **Name** field, enter the name for the contact, and then press **OK**.
6. Select one of the following:
   - **Work number**
   - **Mobile number**
   - **Other number**
   - **Ring signal**
7. Press **Add**.
8. Enter the numbers.

   The administrator can add a variable or the character “U” to the **Work number**, **Mobile number**, or **Other number** field to allow users to enter additional numerical characters before calling the number.

   You can set a specific ring signal for each contact.
9. Press **OK**.
10. Press **Save**.

Adding a contact from the call list

Procedure

1. Press **Menu**.
2. Select **Contacts**.
3. Select **Add contact** > **From call list**, and then select a number from the call list.
4. Press **Add**.

5. Select any of the following:
   - **Work number**
   - **Mobile number**
   - **Other number**
   - **Ring signal**: You can set a specific ring signal for each contact.
6. Press **Add**.
7. Enter the name for the contact, and then press **OK**.
8. Press **OK**.

   If the Force stimuli ringing is enabled, the handset uses the system-provided ring signals instead of the local ring signals. This function is applicable in legacy systems only (stimuli).
9. Press **Save**.

Editing a contact

About this task

Use this procedure to edit local contacts.

Procedure

1. Press **Menu**.
2. Select **Contacts**.
3. Select **Edit contact**.
4. Select the contact, and press **Edit**.
5. Select any of the following:
   - **Name**
   - **Work number**
   - **Mobile number**
   - **Other number**
   - **Ring signal**
6. Press **Edit**, and then enter the new name or number or select the new ring signal.

   The administrator can add a variable or the character “U” to the **Work number**, **Mobile number**, or **Other number** field to allow users to enter additional numerical characters before calling the number.
7. Press **OK**.
8. Press **Save**.

Deleting a contact

Procedure

1. Press **Menu**.
2. Select **Contacts** > **Delete contact**.
3. Select the contact that you want to delete, and then press **Delete**.
4. Press **Yes** to confirm.

   It is not possible to delete a company phonebook contact. These contacts are indicated by the **Locked entry** ( ) icon before their name.

Setting a ring signal for a contact

Procedure

1. Press **Menu**.
2. Select **Contacts**.
3. Select **Add contact** or **Edit contact**.
4. Select **Ring signal**.
5. Select the ring signal to be used for the contact.
6. Press **Back**.
7. Press **Save**.

Managing shortcuts

Shortcuts

Using the Shortcuts menu, you can set predefined functions as shortcuts for the soft keys, hot keys, navigation keys, and the multifunction button. For example, you can define the soft key as a shortcut to make a call or send a message.

Note:

If you create a shortcut to the “Phone Call” function, you can add a variable/character “U” in the “Enter Number” field that allows users to enter additional numerical characters before calling the number.

Defining soft keys

Procedure

1. Press **Menu**.

2. Select **Shortcuts**.
3. Select **Soft keys**.
4. Select any of the following:
   - **Left**
   - **Middle**
   - **Right**
5. Enter a name for the soft key, and then press **OK**.
6. Select **Function**.
7. Select a function from the list, and then press **Back**.
8. Select **Value**(only for some of the functions), and press **Select**.
9. Enter a value (for example, a number), and then press **Back**.
10. Select **Control question** and press **Select**. The default is **Off**.
11. Press **Back**.
12. Press **Save**.

Defining hot keys

Procedure

1. Press **Menu**.
2. Select **Shortcuts**.
3. Select **Hot keys**.
4. Select from **2** to **9**.
5. Select **Function**.
6. Select a function from list, and then press **Back**.
7. Select **Value** (only for some of the functions), and press **Select**.
8. Enter a value (for example, a number), and then press **Back**.
9. Select **Control question** and press **Select**. The default is **Off**.
10. Press **Save**.

Defining navigation keys

Procedure

1. Press **Menu**.
2. Select **Shortcuts**.
3. Select **Navigation keys**.

4. Select any of the following:
   - **Up**
   - **Down**
   - **Left**
   - **Right**
5. Select **Function** and press **Select**.
6. Select a function from the list, and then press **Back**.
7. Select **Value** (only for some of the functions), and press **Select**.
8. Enter a value (for example, a number), and then press **Back**.
9. Select **Control question** and press **Select**. The default is **Off**. Press **Back**.

   If the control question is enabled, the system displays the message: `Press "Yes" to proceed`.
10. Press **Save**.

Defining the multifunction button

Procedure

1. Press **Menu**.
2. Select **Shortcuts**.
3. Select **Multifunction**.

   The support for this feature depends on the type of model used.
4. Select **Long press** or **Multi press**.
5. Select **Function** and press **Select** to select function.
6. Select a function from list, and press **Select**, then press **Back**.
7. Select **Value** (only for some of the functions), and press **Select**.
8. Enter a value (for example, a number), and then press **Back**.
9. Select **Control question** and press **Select**. It is disabled by default.

   If the control question is enabled, a dialog box is displayed when you press the defined soft key. The dialog box displays the following message: `Press "Yes" to proceed`.
10. Press **Save**.

Managing My favorites

Adding to My favorites

Procedure

1. Press **Menu**.
2. Select **My favorites**.
3. Select **Add new**.
4. In the **Name** field, enter a name for the favorite.
5. Press **OK**.

   The system displays the **Function** menu.
6. To navigate to the required function, press up and down on the navigation key.
7. Press **Select** or the confirmation button on the navigation key.
8. **(Optional)** If required enter values in the fields. This is applicable to only some of the fields.
9. Press **Back**.

Editing My favorites

Procedure

1. Mark the name in My favorite by pressing the navigation key up and down.
2. Press **More**.
3. Select **Edit**.
4. Edit the parameters.
5. Press **Back**.

Deleting My favorites

Procedure

1. Mark the name in My favorite by pressing the navigation key up and down.
2. Press **More**.
3. Mark **Delete** by pressing the navigation key up and down.
4. Press **Select**.
5. Press **Yes**.

Managing messages

Mini Messaging

Depending on the model of handset that is used, it can receive text messages with a maximum of 12 characters. When a text message is received, the message alert signal sounds. The message is displayed in a popup window.

Note:

The support for this feature is dependent on the model of handset that is used.

If the received message contains more than 12 characters, the remaining characters are discarded. Only the last received message is displayed. For example, a first message is received and displayed in the popup window. Another message is received and is displayed instead of the prior message which is discarded.

Press **Close** when the message has been read. It is not possible to reply to a message or create and send a new message. The messages are not stored in the handset.

Message List

The thirty last received messages are stored in a list. The message list is located in the **Messaging** menu **Inbox**. Time and date information is included in the message. If a message is received when the inbox already contains thirty messages, the message in the inbox with the oldest time and date is automatically replaced by the newly received message.

Inbox

Reading a stored message

Procedure

1. Press **Menu**.
2. Select **Messaging**.
3. Select **Inbox** to view the message list.
4. Select a message, and then press **View**.

   You can scroll the message list with the up and down arrows on the navigation key.

Replying to sender

Procedure

1. Press **Menu**.
2. Select **Messaging**.

3. Select **Inbox** to reply to the message.
4. Press **Reply**.
5. Write your message, and then press **Send**.
6. **(Optional)** If required, edit the number to the receiver and press **Send**.

Deleting a message

Procedure

1. Press **Menu**.
2. Select **Messaging**.
3. Select **Inbox** to view the message list.
4. Select a message that you want to delete, and then press **More**.

   You can scroll the message list with the up and down arrows on the navigation key.
5. Select **Delete**, and then press **Yes**.

   The system deletes the message.
6. **(Optional)** To delete all messages in the list, select **Delete all** and press **Yes**.

Forwarding a message

Procedure

1. Press **Menu**.
2. Select **Messaging**.
3. Select **Inbox** to view the message list.
4. Select the message that you want to forward, and then press **View**.

   You can scroll the message list with the up and down arrows on the navigation key.
5. Press **More**.
6. Select **Forward**.
7. **(Optional)** If required, write additional text.
8. Press **Send**.
9. Enter the number of the receiver or press the middle soft key to open the phonebook.
10. Press **Send** to forward the message.

Calling the sender of the message

Procedure

1. Press **Menu**.
2. Select **Messaging**.
3. Select **Inbox**.

4. Select a message.
5. Select **View**.
6. Press **More**.
7. Select **Call Sender**.

Calling while reading a text message

A user can make a call while reading a text message to review and discuss the message with the called party. The called party may be either:

- The message sender, that is, the same party that sent the text message.
- A different party.

The user can activate the loudspeaker function during the call to make it easier to read the received text message while talking to the called party.

Calling a different party

About this task

Use this procedure to call another party to read and review a received text message.

Procedure

1. Open the message and press the **More** soft key.
2. From the pop-up menu, navigate to the **Call** menu item and press the **Select** soft key. The pre-dial screen is displayed. Enter the number of the party to be called or select a number from the handset call list or local or central phone books.
3. Press the **Call** soft key and wait for the called party to reply. The message is replaced by the ongoing call detail. The user can do any one of the following:
   - Continue with the call without referring back to the received message.
   - Redisplay the message and continue the call to further review and discuss the message.
   - Redisplay the message and terminate the call.

Calling a number in a message

Procedure

1. Press **Menu**.
2. Select **Messaging**.
3. Select **Inbox** to view the message list.
4. Select a message, and then press **View**.
5. Do any of the following:
   a. Press **More**, and then select **Call no. in text**.
   b. Press the **Off-hook** ( ) key.

6. If the message contains several numbers, then select the number that you want to call from the list.
7. Press **Call** or the **Off-hook** ( ) key.

Note:

If the sender has written a number in the message, the number can be called without dialling. This option is only visible if the number consists of minimum 3 digits.

Saving a number in a message

Procedure

1. Press **Menu**.
2. Select **Messaging**.
3. Select **Inbox** to view the message list.
4. Select a message, and then press **View**.
5. Press **More**, and then select **Save number**.
6. Select any of the following:
   - **Work number**
   - **Mobile number**
   - **Other number**
7. Press **Add**.
8. Enter the name for the contact, and then press **OK**.
9. Press **Save**.

Message templates

Predefined messages contained in message templates can be used in a number of different situations to quickly construct a message rather than having to construct the message completely from scratch. Up to five predefined messages can be configured for the handset in the **WinPDM/ Device Manager**. This lets the user select and send a message appropriate to the current situation, such as "I am in a meeting" or "I am in the operating theatre".

Before a message is sent, the user may edit, add, or remove text from the message. For example, the message "I am in a meeting" could be appended with " - please call back after 1500".

The message template function can be used in the following contexts:

- When a call is received that the user wishes to decline, but still acknowledge with a message, without having to type a completely new message.
- When a text message is received that the user wishes to answer with a text message without having to type a completely new message.
- When the user is writing a message using the handset Messaging function without having to type a completely new message.

Accessing templates

About this task

Use this procedure to a access a template.

Procedure

1. Open the **Templates** menu as described in the context in which the template is being used.
2. Select the required message from the **Templates** menu.
3. To edit the message, use the handset navigation key to move to different parts of the message, the handset key pad to add additional text, and the **Clear** soft key to delete unwanted text.

Write and send a message overview

A message can be constructed from scratch, or from a predefined template that can be used as it is or edited. The maximum message length is normally 160 characters but may be less depending on the character set used. The first character entered is always upper-case, followed by lower-case character. However, this may be overriden by pressing the * -key before entering the character.

When pressing a key, the first available character for that key is displayed. To enter the other characters supported by the key, press the key until that character appears in the display.

The keys 0-9, * or # can be used. Keys 0 and 1 contains special characters. For example, to enter the character **E**, press key 3 twice. **E** appears in the display and is selected after a timeout or when another key is pressed.

Tip:

If the system supports UTF-8 character encoding, the input language can be changed temporarily by long pressing. This can be used to temporarily access characters in a foreign language.

To delete a character, press **Clear**.

Writing a new message

Procedure

1. Press **Menu**.
2. Select **Messaging**.
3. Select **Write new message**.
4. Write the message from scratch or select a message template by pressing the **More** soft key and, if required, edit the message.

   Note:

   The **More** key is not displayed if no message templates have been defined.
5. When the message is complete, press **Send**.
6. Enter the call number.

7. Press **Send** to send the message.

Sent messages

Reading a sent message

Procedure

1. Press **Menu**.
2. Select **Messaging**.
3. Select **Sent** to view the list of sent messages.
4. Select the message that you want to read.

   You can scroll the message list with the up and down arrows on the navigation key.
5. Press **View** to read the message.

Forwarding a sent message

Procedure

1. Press **Menu**.
2. Select **Messaging**.
3. Select **Inbox** or **Sent**.
4. Select message.
5. Press **More**.
6. Select **Forward**.
7. Press **Send**.
8. Enter the number.
9. Press **Send**.

Received messages

Receive a message

When a text message is received, the message alert signal sounds. The **New message** icon, and the content of the received message are automatically displayed. The icon remains in the display until all new messages are opened. If the message is received during a call, a beep notifies the user.

Note:

If the phone is locked with a PIN, the user must unlock the phone to access a received message.

Using the handset soft keys and menu selections, a received message can be replied to or forwarded to another party. The sender of the message can be called and a call number can be included in the message text. While reading a received message, the user can return to the **Inbox**, review the current inbox content and then return to the message being read. A received message can be read later by selecting **Close**. A received message is stored in the **Inbox**.

Receive a message with request for an answer

In the status bar, a message with request for answer is indicated the same way as an ordinary message. In the message list, the message with request for answer is indicated by the icon.

Accepting or rejecting a message

Procedure

Press the **Accept** or **Reject** soft key.

The option **Delete** is not available for a message with request for answer. An unacknowledged message can only be deleted from the message list.

When an acknowledged message has been replied to, the icon **Read message** ( ) is shown in the message list. The text **Accepted** or **Rejected**, and time and date is also added in the acknowledged message.

Reviewing inbox content while reading a message

Procedure

1. While reading a received message, press the **More** soft key.
2. Select **Inbox** from the pop-up menu.

   The system displays the inbox containing message summaries.
3. Press **Back** to return to the message you were reading.

Enhanced messaging

Message queuing and message priority

To notify you about new incoming messages, all incoming messages are placed in a message queue. The sorting order for the message queue depends on the system settings. By default, the messages are sorted first as per their priority and thereafter as per their arrival time.

The messages in the message queue are automatically displayed for 20 seconds until all the messages have been displayed. You can extend the time to display a message by pressing any button. You can also close a message to immediately see the next message in the message queue.

The messages that you do not close are put last in the message queue and remain in the message queue until you close them. They are shown as **“unread”** in the message list and will not be shown as **“read”** until you have closed them.

Message priority and call priority

As per the default settings, the call information dialog box is always visible in front of a message on incoming calls. You can configure a message with a certain priority to ensure that it is always displayed without being interrupted by a call. When you configure a call priority, the handset compares the call priority with the message priority to determine which information to be displayed, that is, the call information dialog box or the message. If the message priority and the call priority are equal, then the message is displayed.

Interactive messaging

Interactive Messaging (IM) is a function that extends basic messaging. It lets a handset user interact with a server application in the system.

An example can be machinery or equipment that can be accessed from the handset or a personnel calling application. A list of actions can be included in the message sent from the application to the handset.

Note:

The support for this feature is dependent on the model of the handset that is used.

An IM is indicated and viewed the same way as an ordinary message. It is saved along with other messages in the message list.

Note:

An IM is indicated and viewed the same way as an ordinary message. It is saved along with other messages in the message list.

When an IM has been read, the IM may display several options. Mark the one required and press **Select**. If the selected option requests input, enter the information needed and press **OK**. A press on the * -key changes to digit or text input mode depending on whether it is digit or text format in the message. A read message is indicated the same way as an ordinary message.

Note:

If a handset receives an IM update when the original message already has been deleted, the handset automatically sends a negative acknowledge (NAK) to the system, if requested.

The options for an IM depends on the configuration in the client application.

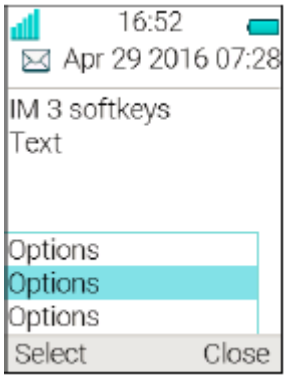

Figure 4: Example of an interactive message

Mobile data from the handset can initiate the application to send the interactive message.

Message indication repetition

The handset can be configured to repeat the audio and visual message received alert. The alert repeats every seven seconds until the user reads the message or turns the alert off. Certain system-defined properties can be assigned to a message to give it a high priority, for example, an alarm priority message.

Alert repeats start automatically when a high priority message is received. Such messages do not need to be explicitly configured to trigger alert repeats. A high priority alert is repeated every 10 seconds for a maximum of 5 minutes and then the alert stops. Alerts continue to be repeated until the user presses the hook-on, mute button or soft key for accessing the message. Note that message indication repeat is a system dependent feature that cannot be activated from the handset.

Color messaging

You can send color messages to handsets. The application that you use to send a message determines the color of the message. Color messaging is useful for categorizing messages.

In the following figure, there are two colored messages (a new message, and a read message) in the Inbox (left image in the figure). The messages are indicated by a gradient color bar behind the envelopes. In addition, a gradient color bar is shown below the envelop when reading a colored message (right in the figure).

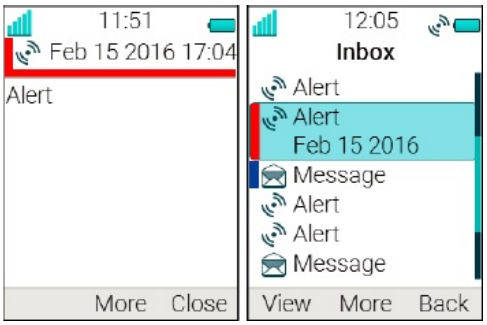

Figure 5: Examples of color messages

Redisplaying the message

About this task

Use this procedure to:

- Redisplay the message while the call is ongoing
- Terminate the call and redisplay the message.

Procedure

1. While the call in ongoing, press **More**.
2. Select **Messaging** > **Inbox**.

   The system displays the received message summary.
3. To display the message in full, press **View**.
4. **(Optional)** Use the four-way navigation key to scroll up and down a long text message to reveal the content while reviewing and discussing the message with the called party.
5. **(Optional)** To terminate the call and redisplay the message, press the **On-hook and On/Off** ( ) key.

Mobile data

Sending mobile data

About this task

Mobile data can be used for:

- Opening a door
- Starting or stopping a machine

User entered data can be sent from the handset by pressing a pre-programmed **Hot** key or **Soft** key, or selecting a **Service**.

Procedure

Data can be predefined or entered only after you:

- Press the **Soft** key, the **Hot** key, or select a **Service**.

Sending mobile data with a prefix

About this task

Mobile data with prefix can be used to send information to an application in the system.

The prefix is predefined by the user when programming the **Hot** key or **Soft** key or **Service**.

Procedure

To send the mobile data from the handset, enter the data and then press:

- A pre-programmed **Hot** key or **Soft** key, or select a **Service**.

Voice mail

Receiving a voicemail

About this task

When you receive a voicemail, it is indicated by the **Voicemail message** ( ) icon in the status bar, and the phone screen automatically displays the content of the voice mail notification.

Information is stored in the **Messaging** inbox until you listen to all the voicemail messages.

Procedure

1. To dial the voicemail, press **Call**.
2. **(Optional)** If you press **Close**, dial the voicemail by long pressing on digit key **1** in standby mode or from the **Inbox** menu.

Checking the voicemail inbox

Procedure

1. Press **Menu**.
2. Select **Messaging**.
3. Select **Inbox**.
4. Select the voicemail message and press **View**.
5. Press **Call**.

   Voicemail is displayed with one entry in the message list regardless of the number of voicemail received.

One key voicemail access

Procedure

To access voicemail in the standby mode, long press the digit key **1**.

If the extension number is not available, the system displays the "`Voice mail number not defined`" message.

Some systems require that the mailbox extension number is downloaded to the handset.

Managing profiles

Profiles

Setting up customized profiles is useful when there are many users on the same handset and who want different sound profiles.

You can set your own customized profiles for:

- Incoming calls
- Message alerts
- Vibrating alerts
- Key sounds

You can also use customized profiles for temporary settings such as incoming calls must be silent while in a meeting.

You can switch between different profiles.

Note:

Changing settings is not possible on a handset which is set to a profile. You have to leave the profile before.

You can access profile from the menu by selecting **Profiles** > **Select**.

Adding a new profile

Procedure

1. Press **Menu**.
2. Select **Profiles**.
3. To add a new profile, select **Add new**.
4. Enter the name for the new profile, and then press **Save**.
5. To add settings to the profile, press **More** > **Add setting**.
6. Select the setting you want to add to the profile.

   Repeat steps 6-7 if you want to add additional settings.
7. **(Optional)** To add settings by importing from an available profile, press **More** > **Import from**, and then select the available profile.
8. Mark the required setting and press **Edit** to make the changes.

Activating a profile

Procedure

1. Press **Menu**.
2. Select **Profiles**.
3. Select a profile from the list to activate it.

   When a profile is activated, the **Profile active** ( ) icon and the name of the profile are displayed in idle mode.

Deleting a profile

Procedure

1. Press **Menu**.
2. Select **Profiles**.
3. Select the profile that you want to delete, and then press **More**.
4. Select **Delete** from the menu, and then press **Yes**.

Editing a profile

Procedure

1. Press **Menu**.
2. Select **Profiles**.
3. Select the profile that you want to edit, and then press **More**.
4. Select **Edit**.
5. Do one of the following:
   - Edit the setting by marking it and then press **Edit**.
   - Add additional settings by pressing **More**, and then selecting **Add setting** or **Import from**.
   - Remove a setting by marking it and then selecting **More** and then **Remove setting**.

Alarm operation

The support for the system dependent features are dependent on the model of the handset used.

If a shared phone is used, it must be logged in to the system to be able to send alarm.

Activating an alarm

About this task

You can always trigger the alarm when you are speaking, editing your settings, or while the handset is locked.

Procedure

To activate the alarm, press the alarm button twice within two seconds.

User can set a parameter through the **WinPDM** or **Device Manager**.

The system displays an information text `Personal alarm`.

The alarm is sent to the alarm central that distributes it further. After that the handset returns to stand-by mode.

Acoustic location signal

An alarm can be followed by an Acoustic Location Signal (ALS). The ALS is a signal from the handset that sounds for a predefined period of time. The signal is silenced by pressing the **Mute** button on the handset.

Testing the alarm

Procedure

Press and hold the alarm button until the system displays the information text `Test Alarm`.

Alarm with location information

Information about the handset's location can be sent along with an alarm. The location can be added as follows:

- Manually added by the user
- An approximately location given by the closest Base Station.

Alarm with data

The data must manually be defined and stored by the user. To use the function, one Soft or Hot key or Navigation key in the handset must be defined as a shortcut to the menu **Edit alarm data**. The stored data is added to all types of alarm at transmission.

Automatic call after alarm

A handset can be configured to call a predefined number after an alarm has been sent. If configured, it is also possible to call the predefined number without sending an alarm by pressing the push-button. Depending on the settings, the call can be established in the following modes:

- Loudspeaking mode
- Normal mode
- Monitor mode

Procedure call

About this task

When configuring the functions **Call services**, **In call** menu, **Contacts**, or a shortcut or service to the **Phone call** function, the data added in these functions is static. When entering the data for the function to be used, it is possible to add a variable or character U that allows the user to enter additional numerical characters before calling the number or sending the data to a system.

Example of configuration:

A user wants to create a service with the Phone call function. The PBX requires that a prefix must be added to a phone number. In this case, the user can pre-program the prefix and then enter the applicable phone number when using the Phone call function.

Procedure

1. Press **Menu**, or the confirmation button.
2. Select **My favorites**.
3. Select **Add new**.
4. In the Name field, enter **Call no** and press **OK**.
5. Select the function **Phone call**.
6. In the **Number** field, enter the prefix to be used followed by the character `U`. In this case, the text string is as follows *21*U. The character U represents an Enter number dialog where the user can enter the phone number.
7. Press **Save**.

   When using the function, an Enter number dialog appears, see figure below. If the user enters **123** (or selects a contact with this number by pressing the **Call Contact list** ( ) and presses **OK**, the number *21*123 is dialed. Note that no call is established before the user presses **OK**, that is, post-dial.

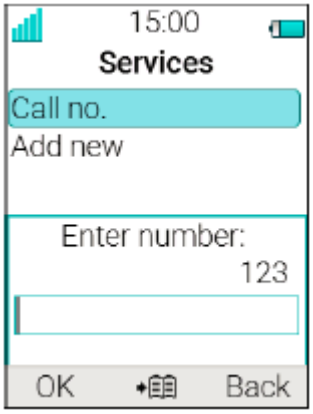

Figure 6: Enter number dialog.

Note:

Using a shortcut to make a procedure call is not supported while the handset is locked.

System Profiles

A system profile is used to restrict a user from changing certain settings in a handset. The settings require configuration in the **WinPDM** or **Device Manager** and include alarm settings, soft key settings and presence settings. When the system profile is activated, the settings are not displayed in the menu of the handset.

A system profile can be made active in the handset by showing its profile name in idle mode. The system profile can be used in combination with the user profile. If there is conflict between the settings in the system profile and the settings in the user profile, the settings in the system profile are used. If a user changes a setting in the handset menu that is determined by a system profile, the menu is updated but the setting is not changed. If a system profile is to be permanently activated, it is recommended to hide the soft keys menu in the handset. The support for this feature is dependent on the model of handset that is used.

Example

For example, in the left-hand view of figure, a system profile has been activated and is indicated by the system profile name “Sys Profile SK1” shown in the handset in idle mode. In this case, the soft key "Inbox" and middle soft key "PTT 4" are determined by the system profile settings. If a user, for example, attempts to change the middle soft key name to “PTT 5”, by using the handset menu **Shortcuts** > **Soft keys** > **Middle** (middle view in figure), the soft key shows “PTT 5” and the setting can be saved. However, the system profile settings are not overridden. When the handset returns to idle mode, the system profile settings are redisplayed, showing “PTT 4” instead of the user changed “PTT 5” (right-hand view in figure).

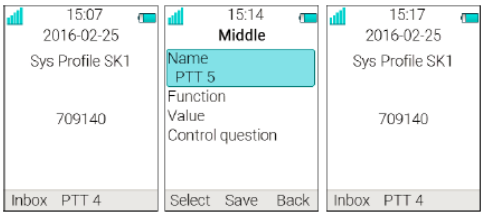

Figure 7: System profile overrides settings changed by the user

System Profiles Status Indications

The administrator can configure the handset to play a sound if the system profile is activated or deactivated. This provides the user with an audible alert when the system profile changes from inactive to active or vice versa. The feature can be triggered by several kinds of events, such as moving between different parts of a buildings where a system profile might be appropriate in one location but not required in another. The system profile name is displayed when the handset is in idle mode. The user should be aware that the characteristics and behaviour of the handset change when the system profile changes.

Advanced Functions

Admin menu

The system administrators can use the hidden menu in the handset for administration.

The **Admin menu** contains:

- Software, hardware, license information, IPEI/IPDI, and user ID
- DECT link and system information
- Centralized Management status
- Site Survey Tool for indication of radio signal and base station listing
- Fault logging
- Enhanced system menu with ability to alter protection
- Frequency band selection
- Factory reset option

To activate the **Admin Menu**, enter **Settings** > **Device info** > **Software** and press the buttons containing CRAFT#, that is **27238#**.

The **Admin Menu** disables after rebooting the handset.

For quick access to the Device Information (DI) menu in idle mode, press the keys containing *#DI# (that is *#34#). For quick access to IPEI/IPDI, press *#06# in idle mode. See the table below.

Information	Code
Software version	*#34#
Hardware version	*#34#
IPEI/IPDI	*#34# or *#06#
User ID	*#34#

Clearing lists in charger

You can set a parameter through the WinPDM or Device Manager to clear messaging lists and call lists that has been stored in the handset.

When the parameter is activated and the function has been downloaded to the cordless telephone, the lists are deleted when placed in a charger. This feature can be useful during administration of handset for new users.

Troubleshooting

Operational problems

Fault	Probable cause	Action or comment
No display	The battery level is low or the handset is defective.	Charge the battery or contact system administrator. **Sound off** is on, or ringer volume set to silent, or the handset is defective.
No ringing	**Sound off** is on, or ringer volume set to silent, or the handset is defective.	Long press **Sound off**, or increase volume, or contact system administrator.
No change in time and date setting	PBX dependent.	Changes in the handset appear after a maximum of 24 hours after a change in the system or by turning the handset off and on again.
Cannot mute handset by long pressing **Sound off** or **Mute** Not possible to set the ring volume to **Silent**.	A handset restriction preventing the user to silence the handset.	Enable the parameter **Possible to turn off sound**.

Table continues…

Fault	Probable cause	Action or comment
Handset, with **In charger** > **Other actions** > **Sound off enabled**, is not muted when placed in charger.		
Cannot switch off handset by long pressing **On-hook**. Handset, with **In charger** > **Other actions** > **Sound off enabled**, is not switched off when placed in charger.	A handset restriction preventing the user to switch off the handset.	Enable the parameter **Possible to switch off handset**.

Error or warning messages

Display shows	Probable cause	Action or comment
No access	The network is in range, but no access rights.	Switch handset **Off** and then switch it **On** again or contact system administrator.
No System. The handset beeps once a minute (during max 30 minutes) with a low tone followed by a high tone (if enabled, the vibrator also follows the beeps).	The handset is out of coverage or handset is defective.	Stop the beep with **Sound off** and go into range. **Note:** When re-entering the coverage area it can take a couple of minutes before the handset automatically has registered into the system or contact system administrator.
No flash driver was found **Note:** This display message is only shown in English.	Failed to read from flash.	Send the handset for service.
Service needed Hardware error **Note:** This display message is only shown in English.	There is a communication problem between components in the handset.	Restart the handset. If the problem persists, send the handset for service.
Service needed Invalid IPDI **Note:** This display message is only shown in English.	Easy replacement procedure not followed correctly or failure during easy replacement procedure.	Send the handset for service.

Table continues…

Display shows	Probable cause	Action or comment
Service needed Parameters corrupt. **Note:** This display message is only shown in English.	The handset is defective.	Select **Reset** on the middle soft key if available or if no **Reset** option is available or fault does not resolve, the handset needs repair. **Note:** Display message only shown in English.
Enter PIN code	The lock of the handset is activated.	Enter the required PIN code. If PIN code lost enter new via PDM/ Device Manager or do a factory reset via PDM/Device Manager.
Battery low, charge now	The battery level is low.	Charge or replace the battery.
Phonebook is not available at the moment.	The phone book does not respond, not available at the moment.	Try again later or if fault persists do a factory reset via the **Admin** menu or PDM/Device Manager.
Voice mail number not defined	There is no Voice mail number defined in the handset.	Define a Voice mail number via PDM/Device Manager.
Could not encrypt connection	The parameter **Encryption Required** is enabled in the handset in combination with; 1. Unencrypted base station(s); and/or, 2. Unsupported base station(s).	1. Disable the **Encryption required** parameter in handset via PDM/Device Manager; and/or, 2. Enable the encryption in the base station(s); and/or,
Not allowed	1. The user cannot login to the handset with the shared phone functionality enabled, due to another handset currently using the same extension (User). 2. The user cannot logout from the handset with the shared phone functionality enabled, due to incorrect password (AC code). 3. The extension (User) does not exists. 4. The password is not correct.	1. Logout from the handset that uses the same extension. 2. Enter `#11*<AC code>#` on the keypad and press **Off-hook** to logout from the shared phone. 3. Make sure that you entered correct extension. If needed, contact the system administrator. 4. Make sure that you entered correct extension. If needed, contact the system administrator.

System Handling

Software upgrade and additional features

You can upgrade the software and additional features or parameters in the handset by using the WinPDM or Device Manager. The following are examples of additional features that you can configure:

- Company phonebook
- Downloadable languages
- Customizing the menu tree

The license(s) can also be added via the **Admin** menu in the handset.

To view the handset's software version, press `*#34#` in the idle mode.

Handset updates via the charging rack

Whenever there are updates for the handset, you are instructed to leave the handset in a central charging rack so that the handset can be updated with new features and functions. During an update, the handset displays the icon and the `Updating handset` message. You can close the message by pressing **OK**.

Figure 8: Handset update while in charger

If you remove the handset from the charger to use it, the update is suspended. The update is resumed when the handset is again placed into the charger.

When the update is complete, the handset displays the `Handset is updated` message. You can close the message by pressing **OK**.

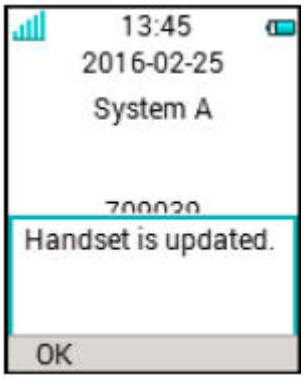

Figure 9: Update completed while in charger

Chapter 7: Customizing Avaya 3735 DECT handset

Settings

Sound and alert settings

Adjusting the ring volume

Procedure

1. Press **Menu**.
2. Select **Settings**.
3. Select **Sound & Alerts** > **Volume**.

   Increase and decrease the volume using the left and right arrows on the navigation key.
4. Press **Back** to save the settings.

Note:

If a handset restriction is enabled, it might not be possible to set the ring signal to **Silent**.

Setting different ring signals for calls

About this task

Use this procedure to set different ring signals for calls.

The handset has 14 different ring signals.

Procedure

1. Press **Menu**.
2. Select **Settings**.
3. Select **Sound & Alerts** > **Ring signals**.
4. Select one of the following:
   - **Internal call**

- **External call**
- **Call back**
- **Priority call**

You can set different signals for internal calls, external calls, callback, and priority calls.

5. Select the ring signal.
6. **(Optional)** Press **Play** to listen to a ring signal before selecting it.

   The ring signal is repeated until you press **Stop**.
7. Press **Back** to save the settings.

Note:

Additional ring signals can be selected if they are configured in the WinPDM.

Setting alerts for messages

Procedure

1. Press **Menu**.
2. Select **Settings**.
3. Select **Sound & Alerts** > **Message alert**.
4. Select a message alert from the list.

   Press **Play** to listen to a message alert before selecting it.

Note:

The **Play** soft key is not available for Enhanced beep. Instead, send a message to the handset to listen to the sound.

By default, the message volume follows the ring volume setting in the handset. However, you can set the message volume to be different.

5. Press **Back** to save the settings.

Tip:

The option **Custom sounds** should be selected to create a customized message alert.

Setting the vibrator alert

Procedure

1. Press **Menu**.
2. Select **Settings**.
3. Select **Sound & Alerts** > **Vibrator alert**.
4. Select one of the following:

- **On**

- **On if silent**: The vibrator is on when the handset is muted.
- **Off**

5. Select vibrating alert.
6. Press **Back** to save the settings.

Note:

If the vibrator is activated, it vibrates for incoming calls and messages. The vibrator can also be activated when receiving a message during a call.

Setting the key sound

Procedure

1. Press **Menu**.
2. Select **Settings**.
3. Select **Sound & Alerts** > **Key sound**.
4. Select one of the following:
   - **Silent**
   - **Click**
   - **Tone**
5. Press **Back** to save the settings.
6. **(Optional)** Press **Play** to listen to a key sound before selecting it.

Keypad lock settings

The handset keypad can be locked automatically to minimize the risk of accidentally pressing keys or buttons while the handset is not in use. The keypad is automatically locked after the lock time as per the **Auto lock time** parameter expires.

The administrator can configure the automatic key lock settings in the WinPDM or Device Manager.

Note:

You can answer or end a call while the keypad is locked. You can call any one of the five predefined emergency numbers while the keypad is locked if this feature is configured in the WinPDM or Device Manager.

The alarm button can be pressed while the keypad is locked.

The user can also configure the automatic key lock settings as described in the following sections. You can configure one of the following options for automatic key lock:

- **On**: Keypad is automatically locked if it is not used before the specified lock time expires.

- **On except calls**: The keypad is automatically locked if it is not used for the specified lock time. If the user is in a call when the auto-lock time expires, the keypad remains unlocked until the user has completed the call.
- **Off**: Keypad is never automatically locked.
- **Auto key unlock**: Keypad is automatically unlocked when a call or message is received. When the user has serviced the call or message, the key lock is reapplied after the specified auto-lock time expires.

The **Auto lock time** parameter specifies the time after which the keypad is automatically locked. The shortest value is five seconds and the longest is three minutes.

Activating automatic key lock

Procedure

1. Press **Menu**.
2. Select **Settings**.
3. Select **Locks** > **Automatic key lock**.
4. Select one of the following:
   - **On**
   - **On except calls**

   The system displays the current key lock setting under **Automatic key lock**.
5. Press **Back** to redisplay the **Locks** menu.
6. Select **Auto lock time**, and then press **Select**.
7. Select the required lock time, and then press **Select**.

   The user can configure a locked keypad to unlock automatically when a call or message is received. After the user has serviced the call or message, the keypad is locked again after the specified **Auto lock time** expires.

Deactivating automatic key lock

Procedure

1. Press **Menu**.
2. Select **Settings**.
3. Select **Locks** > **Automatic key lock**.
4. Select **Off** to deactivate automatic key lock.

Phone lock settings

The handset can be protected for unauthorized use by activating the automatic phone lock. You can configure one of the following options for automatic phone lock:

- **On**: The handset is automatically locked if it is not used before the specified auto-lock time expires, or when it is first turned on. The auto-lock time is specified in the **Auto lock time** parameter.
- **On in charger**: The handset is locked immediately when placed in the charger.

  When removed from the charger and unlocked by the PIN, the handset remains unlocked.
- **Off**: The handset is never locked.

You can change the default phone lock PIN code (“0000”) to a code of your choice. The code should be of minimum four digits and maximum eight digits.

The **Auto lock time** parameter specifies the time after which the handset is automatically locked. The shortest value is five seconds and the longest is three minutes.

Note:

If this feature is configured in the **WinPDM** or **Device Manager**, you can call any one of the five predefined emergency numbers while the handset is locked.

Activating automatic phone lock

Procedure

1. Press **Menu**.
2. Select **Settings**.
3. Select **Locks** > **Phone lock** > **Auto phone lock**.
4. Select one of the following:
   - **On**
   - **On in charger**
5. Enter a PIN code of your choice, and then press **OK**.

   The code should be of minimum four digits and maximum eight digits.

   Note:

   If you forget the PIN code, it can be reset by your distributor.
6. Press **Back**.
7. Select **Auto lock time**, and then select the required lock time.

Deactivating automatic phone lock

Procedure

1. Press **Menu**.
2. Select **Settings**.
3. Select **Locks** > **Phone lock** > **Auto phone lock**.
4. Select **Off**.
5. Enter the PIN code, and then press **OK** to deactivate automatic phone lock.

Note:

If you forgot the PIN code, it can be reset by your distributor.

Changing the PIN code

Procedure

1. Press **Menu**.
2. Select **Settings**.
3. Select **Locks** > **Phone lock** > **Change PIN code**.
4. Select **Off**.
5. Enter the old PIN code, and then press **OK**.

Note:

If you forget the PIN code, it can be reset by your distributor.

6. Enter the new PIN code twice, and then press **Save**.

Display settings

Changing the screen saver

About this task

You can set the screen saver to one of the following:

- **Information**: Displays status and identification information while the handset is idle.
- **Black**: The screen is black when the handset is idle.
- **Black also in call**: The screen is black when a call is in progress.

When the handset with the screen saver set to **Information** is in a charger, the Owner ID is displayed even if the handset is switched off. This simplifies identification when many handsets are in a charging rack.

Procedure

1. Press **Menu**.

2. Select **Settings**.
3. Select **Display** > **Screen saver**.
4. Select one of the following:
   - **Information**
   - **Black**
   - **Black also in call**
5. Press **Back**.

Changing brightness

Procedure

1. Press **Menu**.
2. Select **Settings**.
3. Select **Display** > **Brightness**.
4. Select one of the following:
   - **Normal**
   - **Power save**
5. Press **Select**.
6. Press **Back**.

Rotating text display

Procedure

1. Press **Menu**.
2. Select **Settings**.
3. Select **Display**.
4. Select **Rotate display text**.
5. Select any of the following:
   - **Normal**
   - **Inverted**
6. Press **Back**.

Setting the font style

Procedure

1. Press **Menu**.
2. Select **Settings**.

3. Select **Display**.
4. Select **Font style**.
5. Select one of the following:
   - **Normal**
   - **Bold**
6. Press **Back**.

Time and date settings

The DECT system is responsible for keeping the time in the handset. You cannot change the time and date displayed in the handset. The time and date formats displayed in the handset can be changed by the user.

The handset also synchronizes with the DECT system time when:

- The handset is turned off and then turned on. The handset requests the current DECT system date and time.
- The handset is turned on for longer than 24 hours. The handset requests the DECT system time every 24 hours from the time it was last turned on.

Setting the time format

Procedure

1. Press **Menu**.
2. Select **Settings**.
3. Select **Time & Date**.
4. Select the time format. The options are:
   - 12:00 (AM/PM)
   - 24:00
5. Press **Select** to save the settings.

Setting the date format

Procedure

1. Press **Menu**.
2. Select **Settings**.
3. Select **Time & Date**.
4. Select the date format. The options are:
   - DD/MM/YYYY, for example, 17/09/2016 (also called Europe)

- MM/DD/YYYY, for example, 9/17/2016 (also called US)
- YYYY-MM-DD, for example, 2016-09-17 (ISO 8601)
- MMM DD YYYY, for example, Sep 17 2016
- DD MMM YY, for example, 17 Sep 16
- DD.MM.YYYY, for example, 17.09.2016
- DD-MM-YYYY, for example, 17-09-2016

5. Press **Select** to save the settings.

Call answering settings

The default setting for the handset is to use the **Off-hook** key to answer a call. However, the handset can be configured to answer the call automatically, that is, without pressing a key and in loudspeaking mode if required. Other keys can also be setup to answer a call. If **Any key** is selected, any key, except the **On-hook** key and the **Sound off** key, can be used to answer a call.

Setting the call answering key

Procedure

1. Press **Menu**.
2. Select **Settings**.
3. Select **Answering** > **Answering key**.
4. Select any of the following:
   - **Call key**
   - **Any key**
5. Press **Back** to save the settings.

Setting the call answering behavior

Procedure

1. Press **Menu**.
2. Select **Settings**.
3. Select **Answering** > **Answer behavior**.
4. Select any of the following:
   - **Automatically**
   - **Loudspeaking**
5. Press **Change** to change the setting.

   The check box is selected.

6. Press **Back** to save the settings.
7. **(Optional)** To remove the settings, press **Change**.

   The check box is cleared.

Alarm settings

Editing the alarm data

Procedure

1. Press **Menu**.
2. Select **Settings**.
3. Select **Alarm** > **Edit alarm data**.
4. Enter the alarm data.
5. Press **Save**.

Note:

You can send certain information (for example, a handset's location) along with an alarm. You can configure a shortcut to this menu option if you use it frequently.

Other settings

Changing the text size for messages

Procedure

1. Press **Menu**.
2. Select **Settings**.
3. Select **Messages** > **Text size Normal**.

   The default text size is **Normal**.
4. Select any of the following:
   - **Normal**
   - **Large**

Changing the menu language

Procedure

1. Press **Menu**.
2. Select **Settings**.

3. Select **Language**.
4. Select the language that you want to use for the menu.
5. Press **Back** to save the settings.

Note:

An additional language can be downloaded using the **WinPDM** or **Device Manager**.

Setting the Owner ID

About this task

Use this procedure to set the **Owner ID** to identify the handset.

Procedure

1. Press **Menu**.
2. Select **Settings**.
3. Select **Owner ID**.
4. Enter the name or identity.
5. Press **Save**.

Chapter 8: Maintenance

Maintenance

Maintenance of Batteries

Battery Warnings

The "Low battery" icon ( ) is displayed when the battery has 10% or less remaining capacity left. In addition; a warning signal sounds every minute, and the system displays the message "`Battery low. Charge now.`".

The "Empty battery" ( ) icon is flashing when the battery has 5% or less remaining capacity left. In addition; a warning signal sounds every second, and the system displays the message `Battery empty. Shutting down.`

During a call, only the corresponding battery warning signal notifies the user. The warning signal cannot be silenced during a call. When not in call, the warning signal is silenced by pressing the **Sound off** ( ) key or .

Charge the Battery

Place the handset in the desktop charger or in the rack charger.

The system displays an animated battery icon indicating charging by starting with its current charge and ending with the full charge. A filled battery icon indicates a fully charged battery.

Note:

Only use the prescribed chargers for charging.

Charge Spare Batteries

Spare batteries can be charged with a separate battery pack charger. It can charge six batteries at the same time.

Caution:

It is not permitted to charge intrinsically safe batteries using the battery pack charger.

Replace the Battery

If the standby time for the handset becomes too low, the battery should be replaced by a new one. For information about new batteries, please contact your system administrator or your supplier. It is

attached inside the battery lid and is connected to the handset in such a way that no misalignment of the contact is possible.

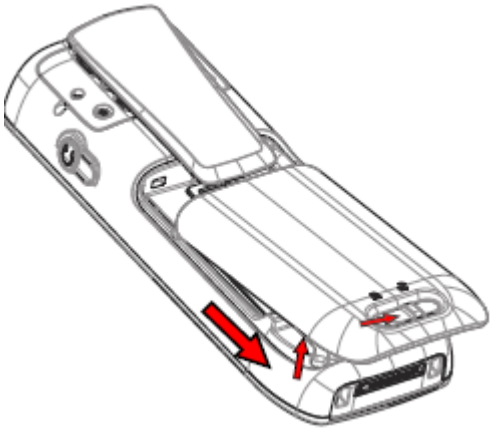

Figure 10: Replaceable battery

Easy Replacement of Handset

Easy replacement can be used if a handset needs to be replaced due to, for example, a broken display.

The easy replacement procedure is done via the handset display and the DC4 Advanced Desktop Charger, or the CR3 Charging Rack.

Note:

Easy replacement is not supported when using DP1 Desktop Programmer.

The following settings are replaced during easy replacement:

- DECT registration
- User parameters (including User ID)
- Contacts
- The extension number is assigned to the new handset.

The following settings are not replaced during the easy replacement:

- Call list
- Messages

Starting Easy Replacement Procedure

About this task

This task suggests necessary requirements before starting easy replacement procedure.

Procedure

1. Check that both the old handset to be replaced and the new replacement handset are of the same device type.

   The easy replacement procedure can be used if the old and new handsets have different product licenses, that is, Talker, Messenger, and Protector. The new handset product license is not replaced by the old handset's product license during the procedure. However, a handset product license, can be moved to another handset using the WinPDM/Device Manager.

2. Use the WinPDM or the Device Manager to check that the software of DC4 Advanced Desktop Charger or CR3 Charging Rack is of version 1.3.x or greater.
3. Make sure that the handset batteries are charged before starting the easy replacement procedure.
4. Switch off the new handset by long pressing .

Easy Replacement Procedure

About this task

Important:

Never remove a handset from the charger until the instructions in the display tells you to do so. If there is an error indication it may be allowed to remove the handset. After the old handset has been in the charger, the new handset must be placed in the charger regardless if the replacement was successful or not. Failing to do so may result in malfunction and the new handset will need to be sent for service.

Procedure

1. On the new handset, press and hold .

   Do not release until you are instructed to do so.

2. Put the new handset in the charger.
3. When the system displays the message "`Start phone replacement?`", release . Press **Yes** (left soft key).

   The system displays the message "`Follow the instructions. Each step can take several minutes.`".

4. Press **OK** (left soft key).
5. When the text "Please insert old phone in charger" is displayed, replace the new handset with the old handset. The handset can either be switched on or off.

   If the CR3 Charging Rack is used, the left charging slot must be used for both handsets.

   The handset restarts and after a few seconds, the system displays a message "`Saving settings. Do not remove phone from charger`". It may take several minutes.

Important:

If the old handset cannot communicate with the charger, put the new handset in the charger to restore its settings (the handset's IPDI). If this step is not performed, the new handset must be sent for service. The settings of the old handset can be transferred to the new handset by using PDM or Device Manager.

6. When the system displays the message "`Please insert new phone in charger`", replace the old handset with the new handset.

   The system displays the message "`Restoring settings`".

   Important:

   Do not remove the handset while the message "`Restoring settings`" is displayed.

7. When the system displays the message "`Phone successfully replaced. Please remove phone to restart.`", remove the handset from the charger.

   The handset automatically restarts.

Attach the hinge-type clip

Attach the hinge—type belt clip as described in the illustration.

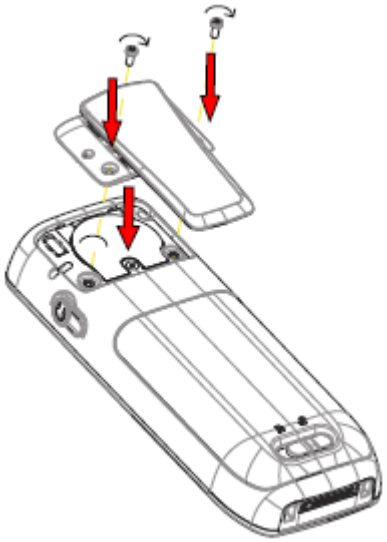

Figure 11: Screw the hinge—type clip into position

Attach the swivel-type clip

Attach the swivel—type belt clip as described in the illustration.

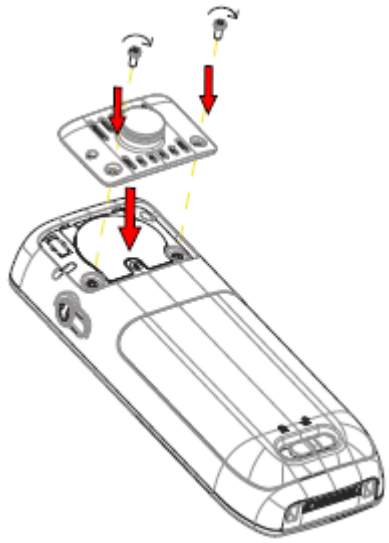

Figure 12: Screw the swivel—type clip into position

Attach cover for no clip

Attach the enclosed cover as described in the illustration when no clip is to be used.

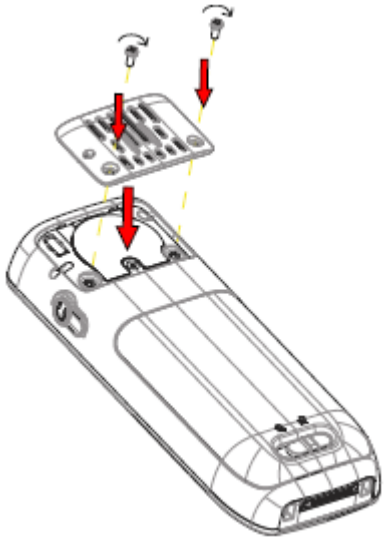

Figure 13: Screw the cover into position

Chapter 9: Energy efficiency

Recommendations on how to save energy:

- Do not charge a battery when the ambient room temperature is above +40° C or below +5° C (above 104° F or below 41° F). Charging below +5° C harms the battery and shorten the lifetime.
- Note that storing Li-Ion batteries at high temperature dramatically reduces its capacity. For example storage around +60° C reduces capacity with 20% in less than a month, permanently.
- Set the handset screen saver to the **Black also in call** option. The screen goes black and the backlight is turned off. The backlight also turns off when the handset is in call. This helps to extend the battery life when the user is on an extended call.
- The handset can be configured to switch off when placed in the charger. When removed from the charger the handset switches on automatically.
- If the charger is not used for a longer period of time, remove the power adapter to the charger.
- Do not put the handset in charger when charging is not required.

Chapter 10: Related Resources

Documentation

You can download the documents you need from the Avaya Support website at http://support.avaya.com/.

Installation and Operation

Title	Description	Audience
Installation and Operational Manual	Describes the procedures for installing the IP DECT phones.	Deployment engineers, solution architects, and support personnel.

Configuration

Title	Description	Audience
Avaya 3735 DECT Handset Configuration Manual	Describes the design, capacity, interoperability, and limitations of the IP DECT handsets.	Sales and deployment engineers, solution architects, and support personnel.

Appendix A: Safety Precautions

Safe operation

For safe and efficient operation of the handset, observe the guidelines given in this manual and all necessary safety precautions when using the handset. Follow the operating instructions and adhere to all warnings and safety precautions located on the product, the Regulatory Information delivered with the handset, and this User Manual. Do not disassemble the handset. Disassembling the handset voids the warranty.

The handset consists of no consumer serviceable components. Service should be performed by an Authorized Service Center only. Changes or modifications to the equipment not expressly approved by the party responsible for compliance could void the user's authority to operate the equipment Frequency Range.

The handset is a radio transmitter and receiver. When it is on, it receives and sends out radio frequency (RF) energy. The handset operates on different frequency ranges depending on market and employs commonly used modulation techniques:

EU (ETSI): 1880-1900 MHz/250mW

USA/Canada (FCC): 1920-1930 MHz/100mW

Note:

Product Designator for regulatory purposes of the Avaya 3735 DECT handset is DH7.

Regulatory Compliance Statements

Exposure to radio frequency signals

	Close to ear	Handheld/body mounted
DH7–xxxx	0.075 W/kg (10g)	0.076 W/kg (10g)

This mobile device meets guidelines for exposure to radio waves. Your mobile device is a radio transmitter and receiver. It is designed not to exceed the limits for exposure to radio waves recommended by international guidelines. These guidelines were developed by the independent scientific organization ICNIRP and include safety margins designed to assure the protection of all persons, regardless of age and health.

The exposure guidelines for mobile devices employ a unit of measurement known as the Specific Absorption Rate or SAR. The SAR limit stated in the ICNIRP guidelines is 2.0 W/kg averaged over 10 grams of tissue.

Tests for SAR are conducted using standard operating positions with the device transmitting at its highest certified power level in all tested frequency bands. The actual SAR level of an operating device can be below the maximum value because the device is designed to use only the power required to reach the network. That amount changes depending on a number of factors such as how close you are to a network base station. The highest SAR value under the ICNIRP guidelines for use of the device at the ear is 0.201 W/kg and at the body is 0.278 W/kg (The measure distance of 1.5 cm). Use of device accessories and enhancements may result in different SAR values. SAR values may vary depending on national reporting and testing requirements and the network band.

Regulatory Compliance Statements (USA and Canada only)

FCC ID: DH7-xBxx:BXZDH7BT DH7-xDxx:BXZDH7BT DH7-xAxx:BXZDH7
IC: DH7-xBxx:3724B-DH7BT DH7-xDxx:3724B-DH7BT DH7-xAxx:3724B-DH7

FCC and IC compliance statements

This equipment has been tested and found to comply with the limits for a Class B digital device, pursuant to part 15 of the FCC Rules. These limits are designed to provide reasonable protection against harmful interference in a residential installation.

This equipment generates, uses and can radiate radio frequency energy and, if not installed and used in accordance with the instructions, may cause harmful interference to radio communications. However, there is no guarantee that interference will not occur in a particular installation. If this equipment does cause harmful interference to radio or television reception, which can be determined by turning the equipment off and on, the user is encouraged to try to correct the interference by one or more of the following measures:

- Reorient or relocate the receiving antennas.
- Increase the separation between the equipment and receiver.
- Connect the equipment into an outlet on a circuit different from that to which the receiver is connected.
- Consult the dealer or an experienced radio or TV technician for help.

Note:

Privacy of communications may not be ensured when using this handset.

Exposure to radio frequency signals

This equipment complies with FCC radiation exposure limits set forth for an uncontrolled environment. This device complies with FCC SAR limit of 1.6 W/kg. The maximum SAR value measured is:

	Head	Body
DH7–xxxx	0.042 W/kg	0.074 W/kg

The handset is designed to be worn with the display towards the body for best radio performance. SAR testing is made with no separation, to approve the device to be carried close to the body. This device must not be co-located or operating in conjunction with any other antenna or transmitter.

Use of non-Avaya approved accessories may violate the FCC and IC guidelines for RF exposure and should be avoided.

Precautions

Handset

- Avoid volume levels that may be harmful to your hearing. Exposure to excessive sound pressure from a handset's earpiece or headset may cause permanent hearing loss.
- Low volume levels might result in missed alerts.
- Only use the handset in temperatures between: -5 °C and +45 °C (23 °F and 113 °F).
- Avoid exposing the handset to direct sunlight, heat sources and moisture.
- Do not place a cold handset in a charger.
- Avoid sudden temperature changes to prevent condensation in the handset. It is recommended to put the handset into an air tight plastic bag until the temperature is adjusted, for example, when entering or leaving a cold or heated building on a warm/cold day.
- If the handset has been exposed to water or condense, remove the battery immediately, and let it dry completely before re-inserting the battery.
- Do not expose the handset to open flame.
- Protect your handset from aggressive liquids and vapors.
- Remove the handset from the charger before cleaning the handset to reduce risk of electric shock.

- Keep the handset away from strong electromagnetic fields.
- The handset may retain small metal objects around the earpiece region.
- Do not place heavy objects on the handset.
- Do not allow children to play with the product packaging material. This could cause choking and or suffocation.
- Do not allow children to play with the handset. It is not a toy.

Battery

- Do not immerse the battery into water. This could short-circuit and damage the battery.
- Do not expose the battery to an open flame. This could cause the battery to explode.
- Do not allow the metal contacts on the battery to touch another metal object. This could short-circuit and damage the battery.
- Do not leave the battery where it could be subjected to extremely high temperatures, such as inside a car on a hot day.
- Use the Desktop Charger, the Charging Rack, or the Battery Pack Charger for charging. Charge the battery for at least one hour the first time you use the battery.
- Do not charge the battery when the ambient room temperature is above 40 °C or below 5 °C (above 104 °F or below 41 °F).
- Do not attempt to take the battery apart.
- Do not remove the battery, unless it needs to be replaced.
- Power off the handset before removing the battery.

Note:

Defective batteries must be returned to a collection point for chemical waste disposal.

Glossary

Device Manager	An application for the management of handsets and charging racks.
Integrated Wireless Messaging and Services	A software that runs on an Elise3 hardware and enables wireless services to and from handsets and chargers.
Portable Device Manager	An application for the management of portable devices and charging racks. Also known as WinPDM.
Unite Connectivity Manager	A unit module that manages users, communication interfaces, message routing, activity logging, and essential messaging services.

Index

Special Characters

_message indication
    repetition 92

Numerics

3735 handsets 10
    introduction 11
373x
    accessories 18
    icons 20
    keys and buttons 23

A

Absence handling 65
Absence settings
    Absence settings 66
accepting
    message 63
    PTT invitation
        incoming call 62
    rejecting
        message 90
accessing
    templates 88
accessories 17
    373x 18
acoustic location 97
acoustic signal 97
activating
    alarm
        activating 96
    automatic key lock 109
    profile 96
Activating automatic phone lock 110
adding
    My favorites 83
    new contact 78
Adding
    contact from the call list 78
Adding a new profile 95
additional In Call functions 38
adjusting
    ring volume 106
    volume
        during call 49
adjusting volume 68
admin menu 100
alarm
    location information 97
    with data 97
alarm data
    editing 115
alarm operation 96
answering 57, 72
    text message
        predefined message 58
answering a call 48
audible signal off 40
audible signal on 40
audio 69
automatic call 98
automatic key lock
    activating 109
    deactivating 109
automatic phone lock
    deactivating 111

B

batteries 117
battery
    precautions 127
battery pack
    charger 18
between calls 71
    toggling 71
bluetooth 44
Bluetooth connection 45
    enabling 45
bluetooth headset
    pairing
        connecting 46

C

call 70
    ending 58
call after alarm 98
call answering behavior
    setting 114
call answering key
    setting 114
Call answering settings 114
calling
    back 70
    contact
        local or company phonebook 77
    different party 86
    emergency 67
    message sender 85
    number
        contacts 77
    number in a message 86

number *(continued)*
push-to-talk group 64
reading 86
text message 86
Calling a contact from the central phonebook 77
Call list 59
call procedure 98
calls 57
ending 71
incoming 57
menu operation 26
menu tree 26
call services
call services 65
diverting 66
Call services
Absence handling 65
call waiting 72
change
history 10
changing
Bluetooth headset 47
headset profile 47
menu language 115
PIN code 111
system 52
text size for messages 115
the screen saver 111
Changing brightness 112
changing the name of Bluetooth headset 47
charger list clear 101
charging rack
CR3 18
checking
voicemail inbox 94
clearing lists 101
Color messaging 92
conference call 71
configuration 123
configuring
PTT call 63
connections 34
contact
editing 79
ring signal
setting 80
contact from the call list
adding 78
contacts
menu operation 27
menu tree 27
number
calling 77
Contacts 76
calling a contact from the central phonebook 77
deleting a contact 80
CR3
CR3 *(continued)*
charging rack 18
customizing
menu tree 38

D

data
sending 74
date format
setting 113
DC3 Desktop Charger
DP1 Desktop Programmer 17
deactivating
Absence settings 66
automatic key lock 109
automatic phone lock 111
declining
calls 57
PTT invitation 64
Declining a call with a predefined message 58
defining
soft keys 80
Defining hot keys 81
Defining navigation keys 81
Defining the multifunction button 82
deleting
message 85
My favorites 83
profile 96
Deleting a contact 80
Deleting entries from the call list 60
dialing
number
headset button 75
number from the call list 76
pre-programmed number 75
dialling
last called number
headset number 76
different party
calling 86
disabling
bluetooth connection 45
Display settings
changing brightness 112
diversion of calls
stopping 67
diverting
calls on no reply 66
calls when busy 66
external calls 66
internal calls 66
documentation 123
DP1 Desktop Programmer
DC3 Desktop Charger 17
DTMF 73

during call
microphone on and off
turning ... 49, 68

E

easy replacement ... 118
easy replacement procedure ... 119
editing
alarm data ... 115
My favorites ... 83
new contact ... 79
profile ... 96
Editing a number from the call list ... 59
enabling ... 45, 73
ending
call ... 49, 58, 71
energy efficiency ... 122
Enhanced messaging
color messaging ... 92
message priority and call priority ... 91
message queuing and message priority ... 90
error or warning messages ... 102
exposure
radio frequency signals ... 124, 126

F

features
introduction ... 11
font style
setting ... 112
forwarding
message ... 85
sent message ... 89
functions
3735 handset ... 14

G

group call
push-to-talk ... 62

H

handset
description ... 14
easy replacement ... 118
logging off ... 40
parts ... 14
precautions ... 126
subscribing ... 52
handset off
switching ... 39
handset on
switching ... 39
Handset updates via the charging rack ... 104
headset button
number
dialing ... 75
headset is turned off ... 51
headset number
last called number
dialling ... 76
headset profile
changing ... 47
headsets ... 44

I

icons
373x ... 20
menu ... 22
in call ... 36
action
in charger ... 54
in charger
action
in call ... 54
not in call ... 55
incoming call
PTT invitation
accepting ... 62
Incoming call
declining a call ... 58
declining a call with a predefined message ... 58
incorrect PIN ... 51
installation ... 123
interactive
messaging ... 91
international call
making ... 75
introduction to bluetooth ... 44

K

keypad
locking ... 41
locking during a call ... 41
unlocking ... 41
unlocking during a call ... 41
Keypad lock settings ... 108
activating automatic phone lock ... 110
keys and buttons
373x ... 23
key sound
setting ... 108

L

legal notices ...
local call

local call *(continued)*
making 74
local or company phonebook
contact
calling 77
location information
alarm 97
locking
handset 42
logging
handset
logging 40
logging off
handset 40
log in a shared phone 39
log out of a shared phone 39

M

maintenance 117
handset 118–121
hinge clip 120
no clip 121
replacement 119
swivel clip 120
maintenance of batteries 117
making
call 48
international call 75
local call 74
menu
messaging 29
menu language
changing 115
Menu operations
call list 59
contacts 76
profiles 95
shortcuts 80
menu tree
customizing 38
message
accepting
rejecting 90
deleting 85
forwarding 85
opening 68
PTT invitation
accepting 63
receive 89
template 87
message list 84
Message priority and call priority 91
Message queuing and message priority 90
message sender
caling 85
messaging
messaging *(continued)*
interactive 91
Messaging
reviewing inbox content while reading a message 90
Mini Messaging 84
mobile data
sending 93
mute ringtone for incoming call 43
mute ringtone for message 43
muting ringtone 43
My favorites 30
adding 83
deleting 83
editing 83

N

new call
starting 69
transferring 70
new contact
adding 78
new messages
writing 88
not in call
action
in charger 55
number from the call list
dialing 76
number in a message
calling 86
saving 87

O

one key
voicemail access 94
open contacts during call 68
opening
message 68
opening contacts 68
operation 45, 123
operational problems 101
operation notice 51
out of battery 51
Owner ID
setting 116

P

pairing
connecting
bluetooth headset 46
pairing fails 51
pairing mode 51
Phone lock settings 110

physical layout
handset ... 12
PIN code
changing ... 111
precautions
battery ... 127
handset ... 126
predefined message
text message
answering ... 58
prefix
mobile data
sending ... 93
pre-programmed number
dialing ... 75
priority
setting ... 54
procedure ... 119
procedure call ... 98
profile
activating ... 96
deleting ... 96
profiles
menu operation ... 28
menu tree ... 28
Profiles ... 95
adding a new profile ... 95
PTT call
configuring ... 63
PTT invitation
declining ... 64
push-to-talk group
calling ... 64
rejoining ... 65

R

radio frequency signals
exposure ... 124, 126
reading
sent message ... 89
stored message ... 84
receiving
message ... 89
voicemail ... 94
redisplaying message
continuing with the call ... 93
rejoining
push-to-talk group ... 65
removing
headset ... 47
renaming
system ... 54
repetition
message indication ... 92
replacement ... 119
replacement procedure ... 119
replying
sender ... 84
Reviewing inbox content while reading a message ... 90
ring signals for calls
setting ... 106
ring volume
adjusting ... 106
rotating
text display ... 112

S

saving
number in a message ... 87
Saving a number from the call list ... 59
screen saver
changing ... 111
selecting
Bluetooth headset ... 46
sender
replying ... 84
sending ... 72
data ... 74
mobile data
prefix ... 93
Sending a message from the call list ... 60
sent message
forwarding ... 89
reading ... 89
setting
call answering behavior ... 114
call answering key ... 114
date format ... 113
font style ... 112
key sound ... 108
Owner ID ... 116
priority ... 54
ring signal
contact ... 80
ring signals for calls ... 106
time format ... 113
vibrator alert ... 107
Setting alerts for messages ... 107
settings ... 35
Settings
call answering settings ... 114
keypad lock settings ... 108
phone lock settings ... 110
shortcuts ... 32
Shortcuts ... 80
defining hot keys ... 81
defining navigation keys ... 81
defining the multifunction button ... 82
soft keys
defining ... 80
Software upgrade and additional features ... 104
Sound and alert settings

Sound and alert settings *(continued)*
setting alerts for messages 107
starting 71
new call 69
status indications
system profile 100
stopping
diversion of calls 67
stored message
reading 84
subscribing
handset 52
switching
handset off 39
handset on 39
headset
cord 51
system
renaming 54
unsubscribing 53
System handling
handset updates via the charging rack 104
software upgrade and additional features 104
system profile
status indications 100
system profiles 99

T

template
message 87
templates
accessing 88
testing
alarm
testing 97
text message
reading
calling 86
text size for messages
changing 115
time format
setting 113
toggling 71
transferring 69, 70
new call 70
transferring call
Bluetooth headset 50
handset 50
turning
microphone on and off
during a call 49, 68
turning audible signal 40

U

unlocking
unlocking *(continued)*
handset 42
unsubscribing
system 53
use loudspeaker 73
using loudspeaker 73
Using the call list
deleting entries from the call list 60
editing a number from the call list 59
saving a number from the call list 59
sending a message from the call list 60
viewing the time of a call 62

V

vibrator alert
setting 107
viewing
missed calls
viewing 61
Viewing the time of a call 62
voicemail
receiving 94
voicemail access
one key 94
voicemail inbox
checking 94
volume
adjusting during a call 68

W

wear 44
with data
alarm 97
writing
new messages 88